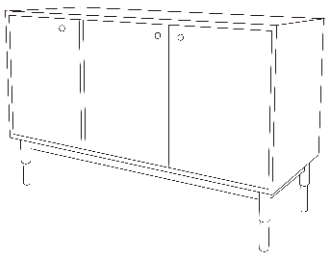

Ax1

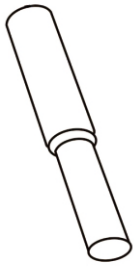

Bx4

Cx8

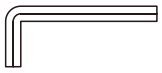

Dx1

1

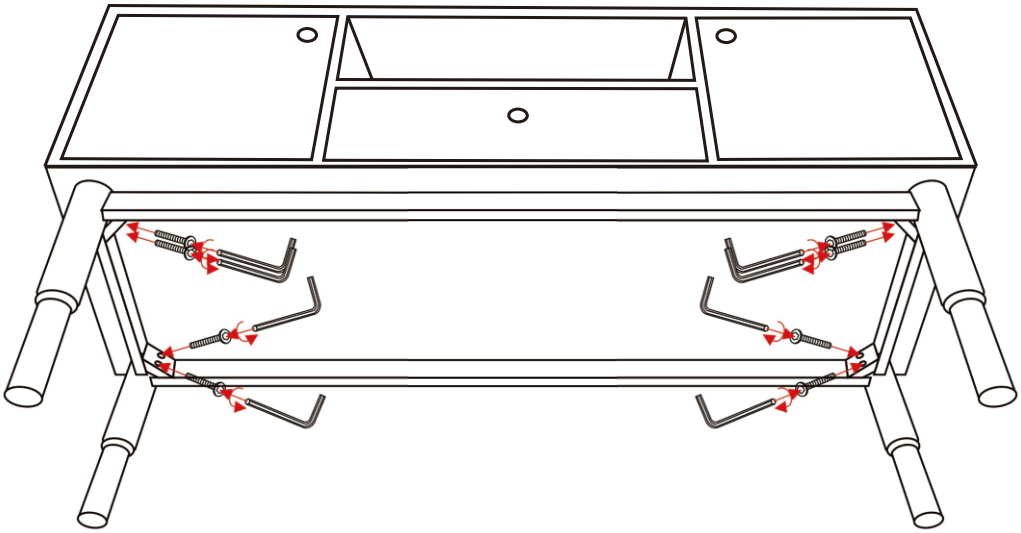
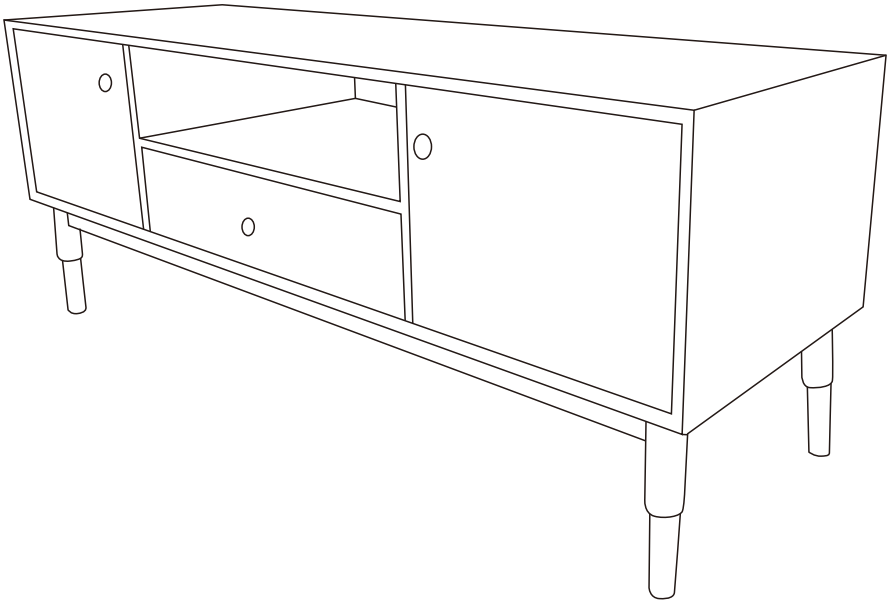
2