INSTRUCTION

Step

1206

1.

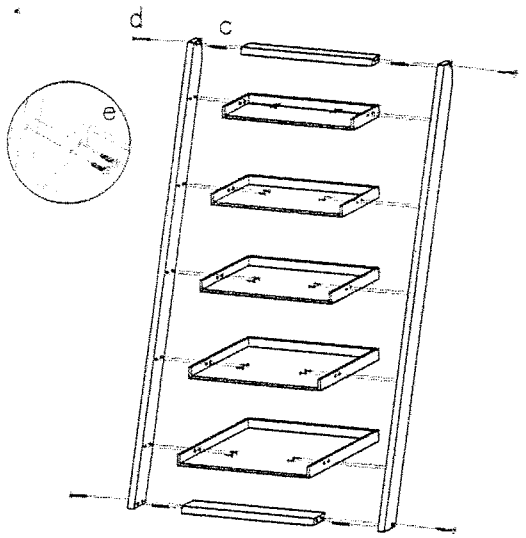

2.

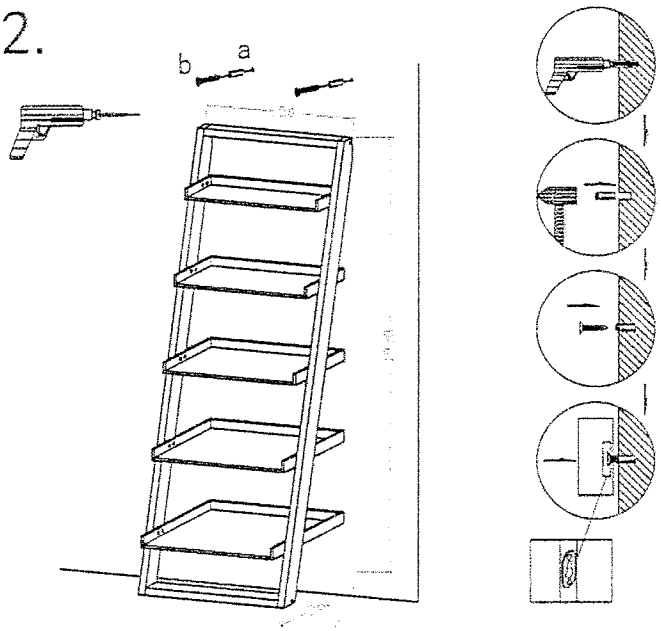

● Finished Product

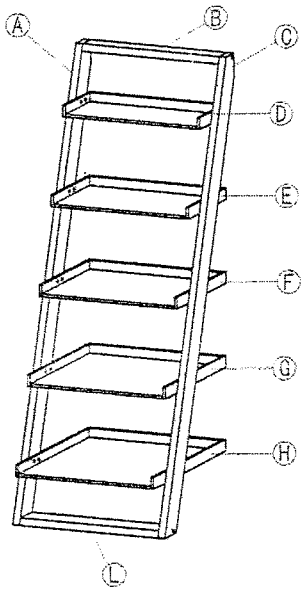

● Item Parts

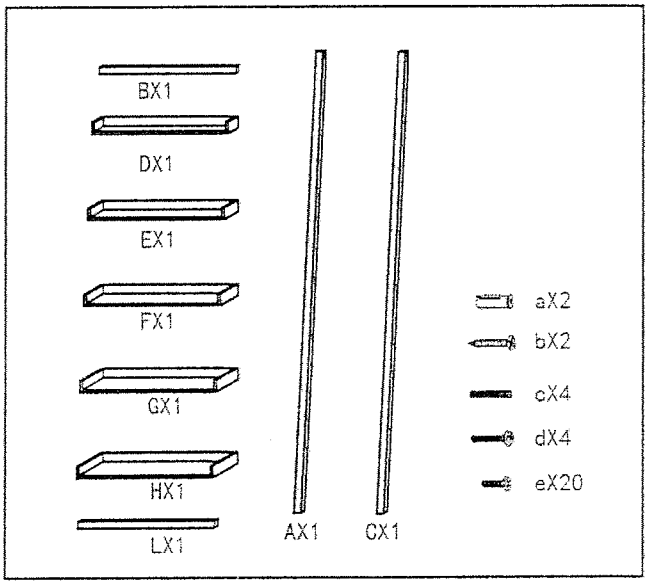

Instruction

1. When opening the carton, pleasure ensure no damage occures to the product.
2. It's recommended that two people assemble this product.
3. Avoid directly the sunlight or water on it.
   Avoid directly placing the items with mixed colour on its surface.
4. Use neutral detergent to clean the product.
5. This product not for climbing.