TOMASUCCI
ITALIAN
style

item code: 3374&3375&3376&3377

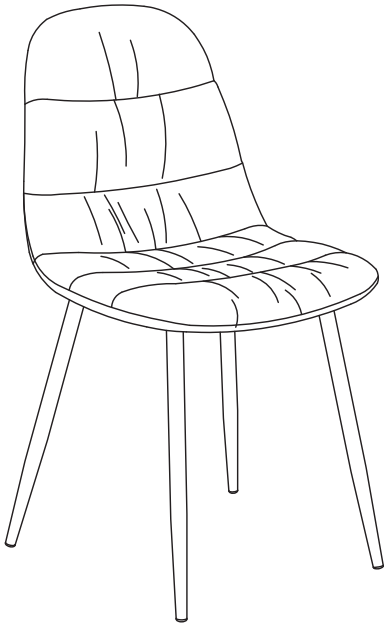

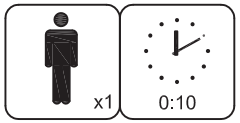

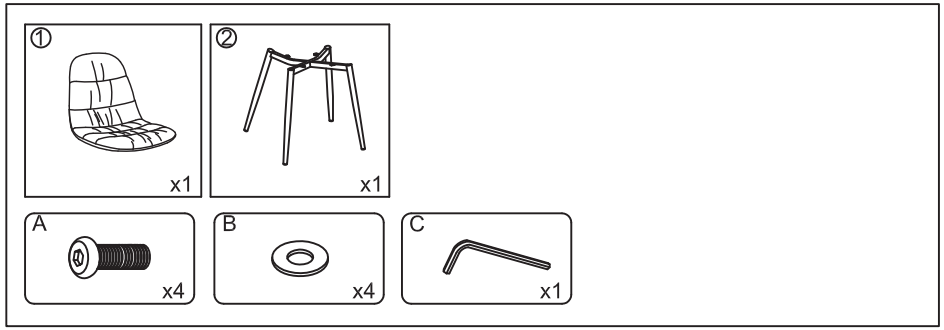
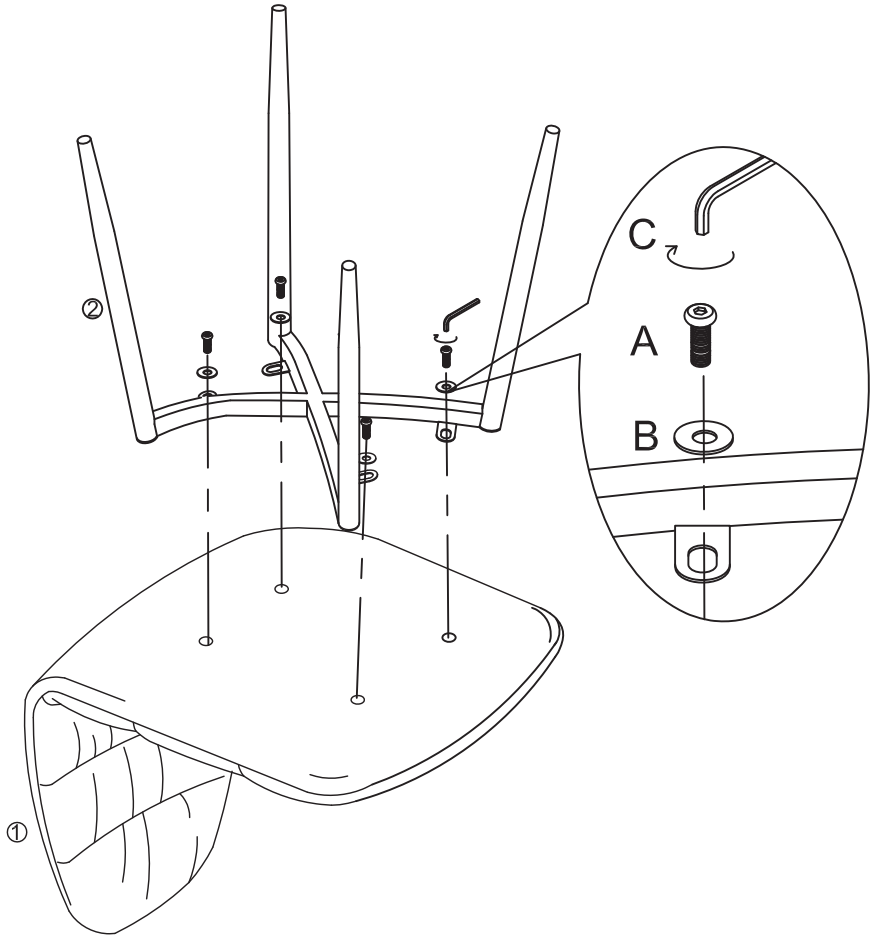
1