JaLOUSE

MAISON

ELISA

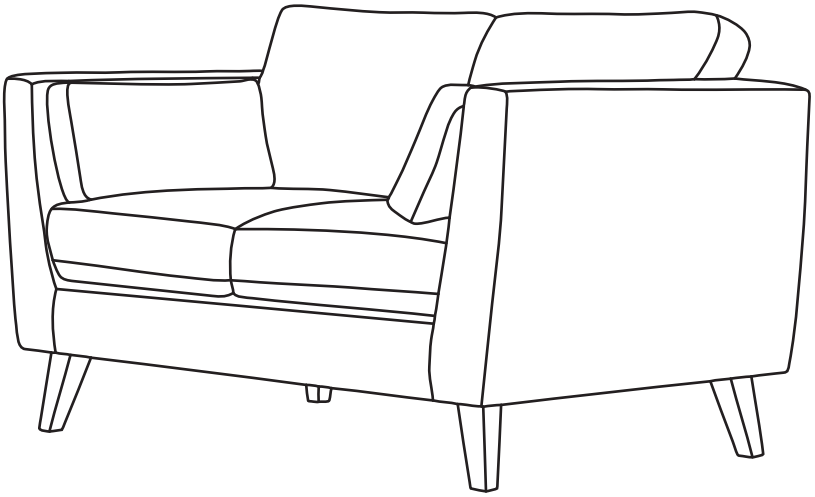

1.

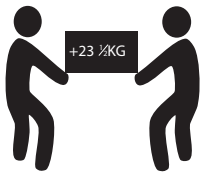

2.

4x

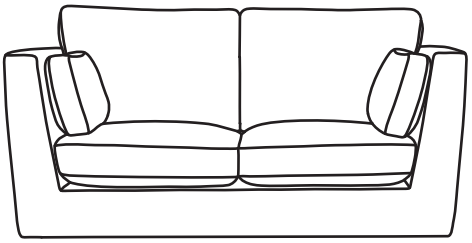

3.

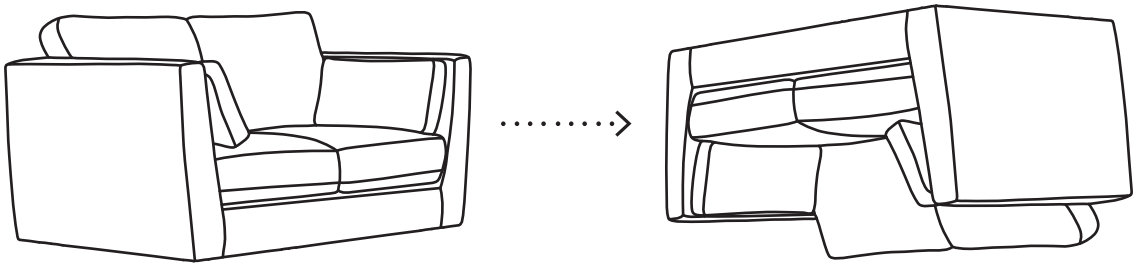

4.

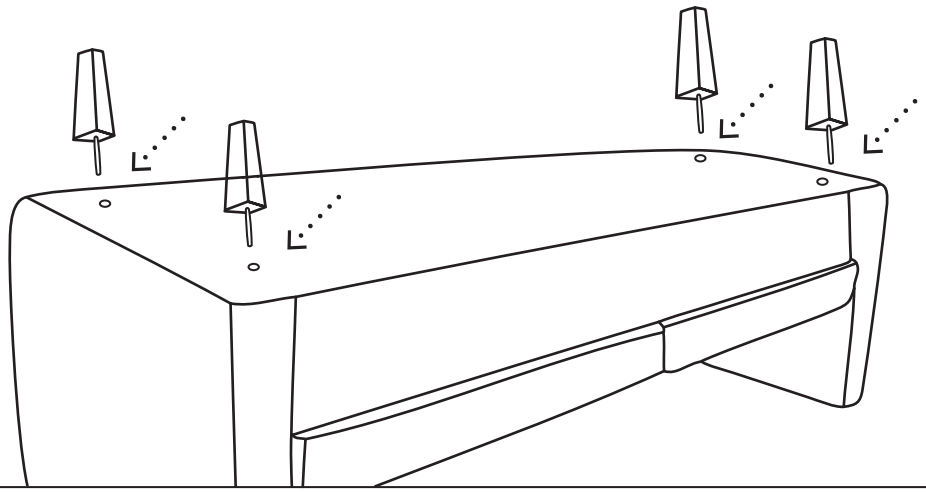

5.

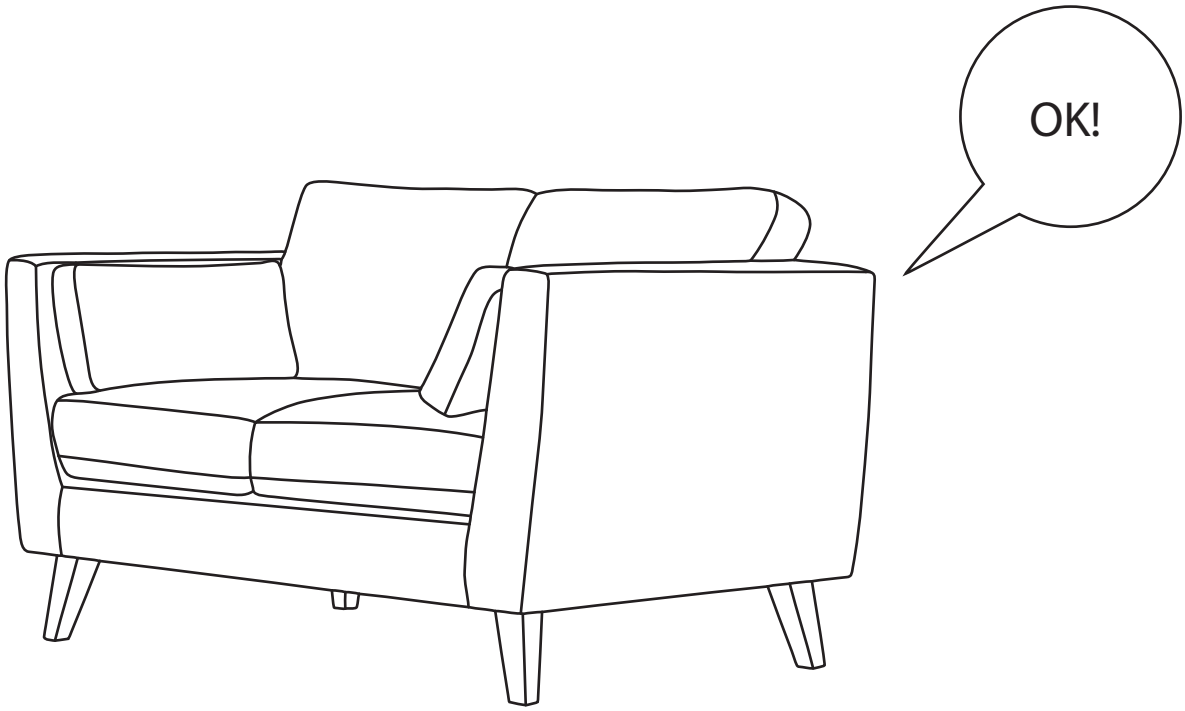

MADE IN POLAND