TED LAPIDUS

M A I S O N

video EN video FR

BONNI

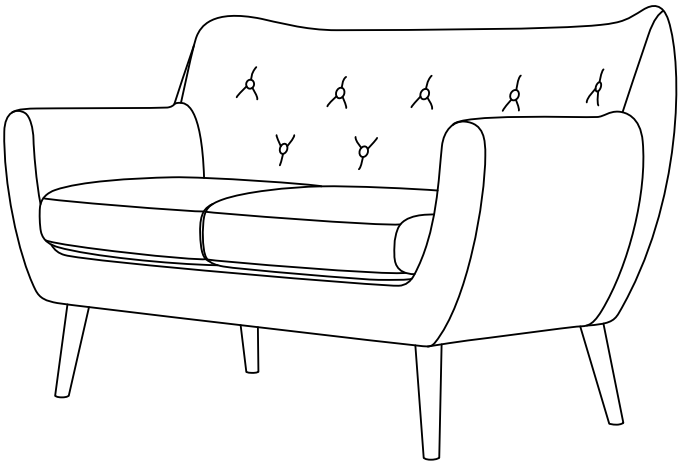

1.

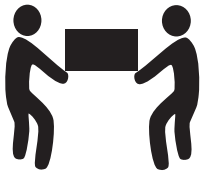

2.

16x **4x**

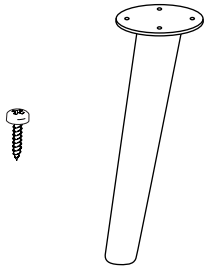

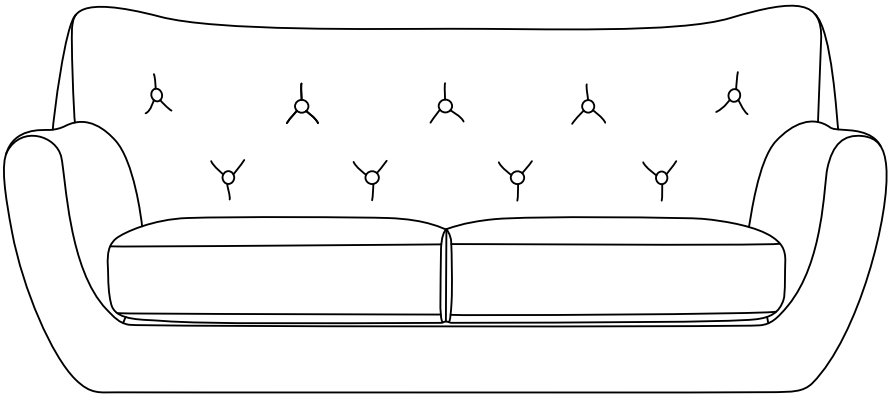

3.

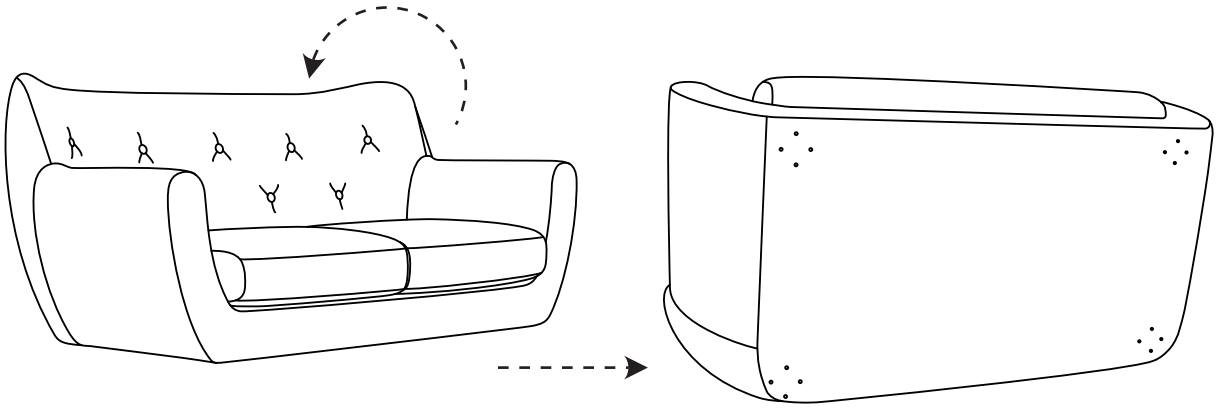

4.

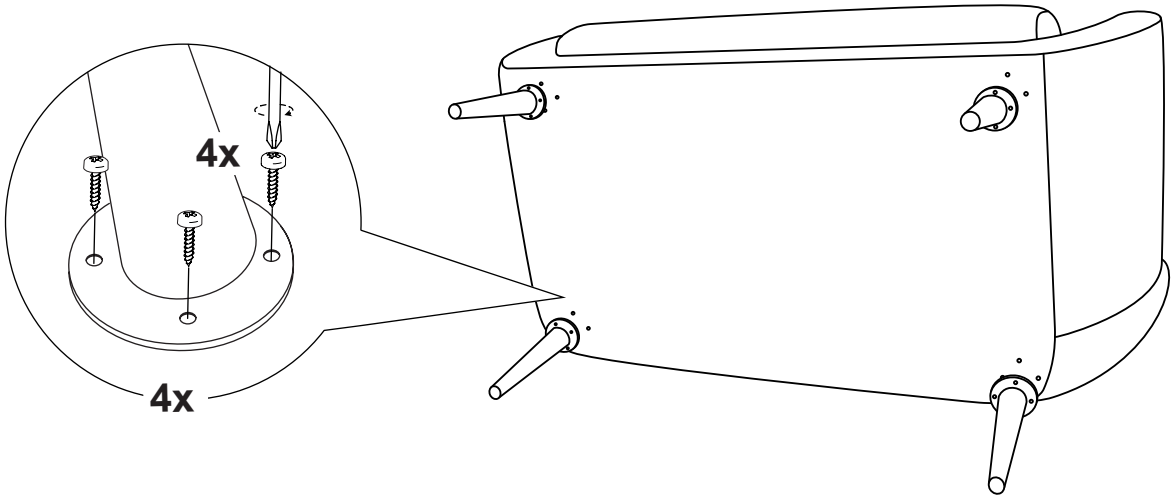

5.

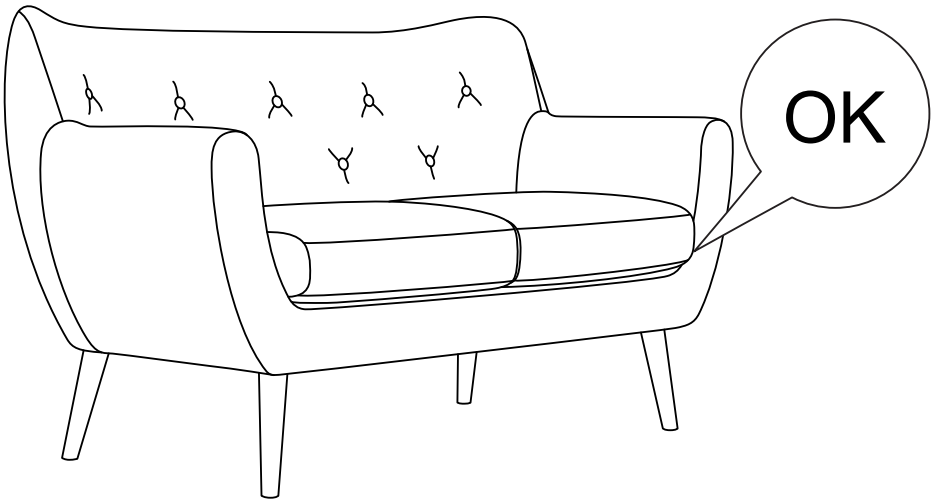

MADE IN POLAND