RODIER

INTERIEURS

TAFFETAS

canapé d'angle droite

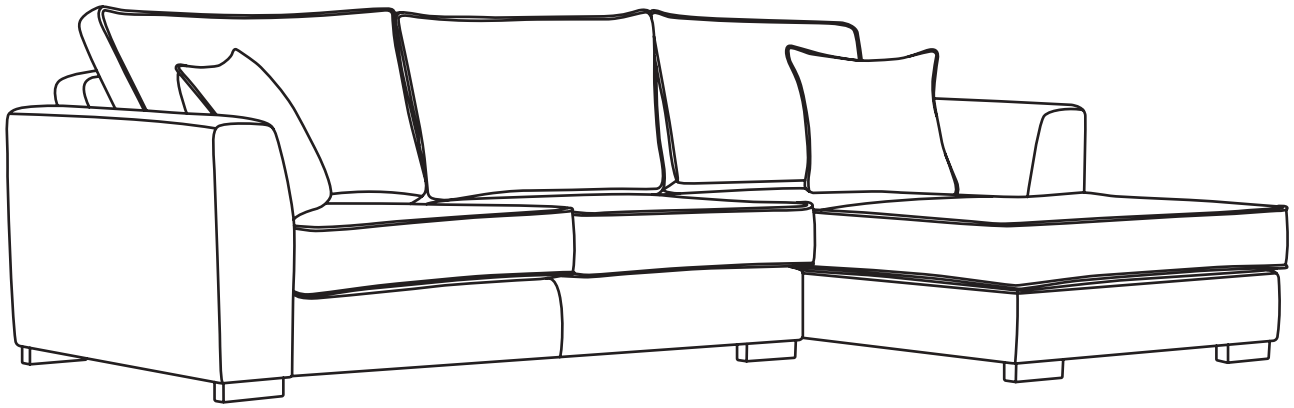

1.

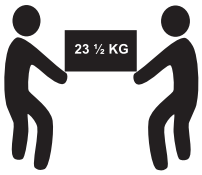

2.

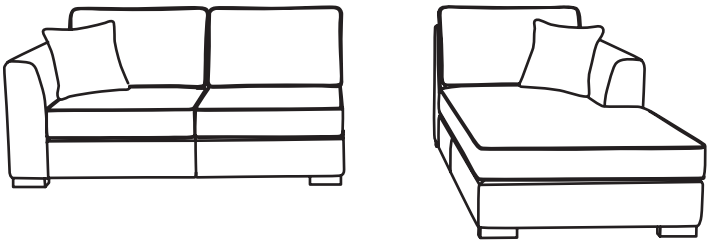

3.

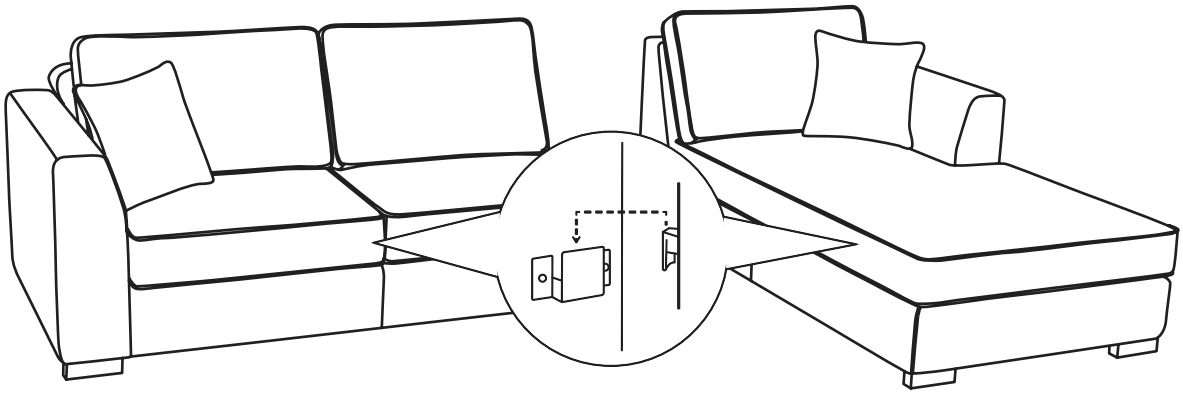

4.

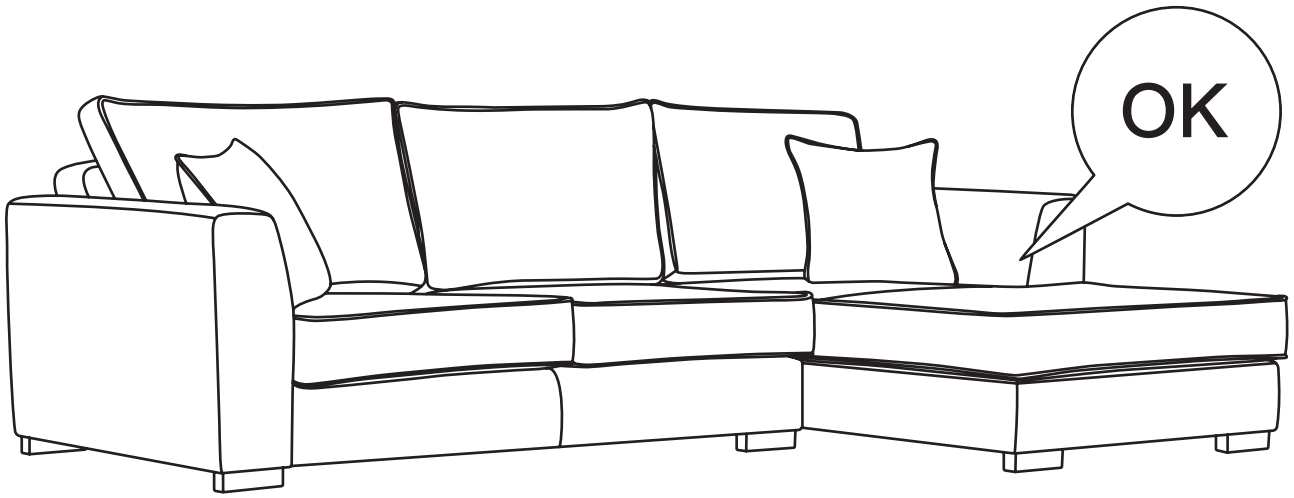

MADE IN POLAND