GARDEN LOUNGER ASSEMBLY
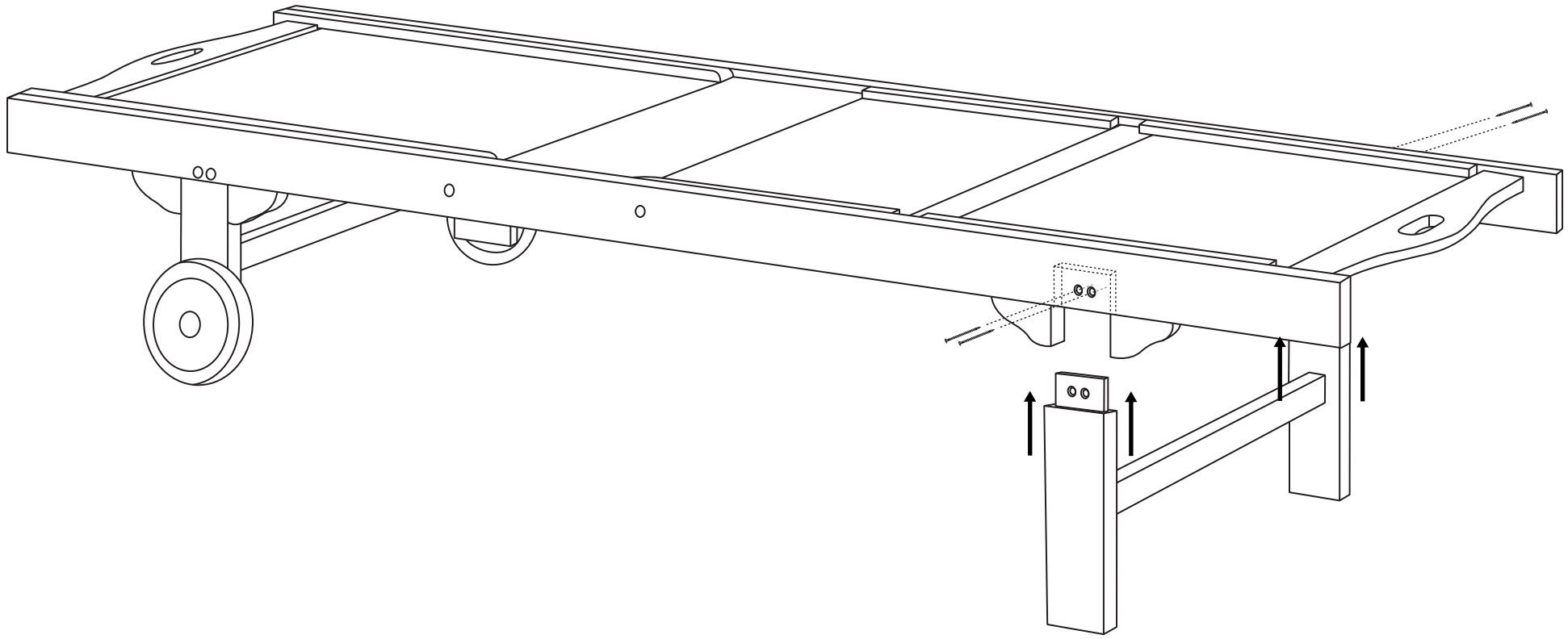
1