MAHE

9902-195

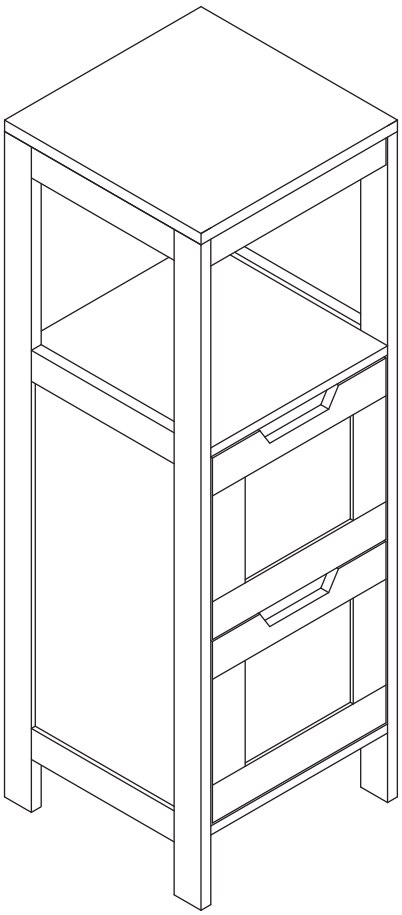

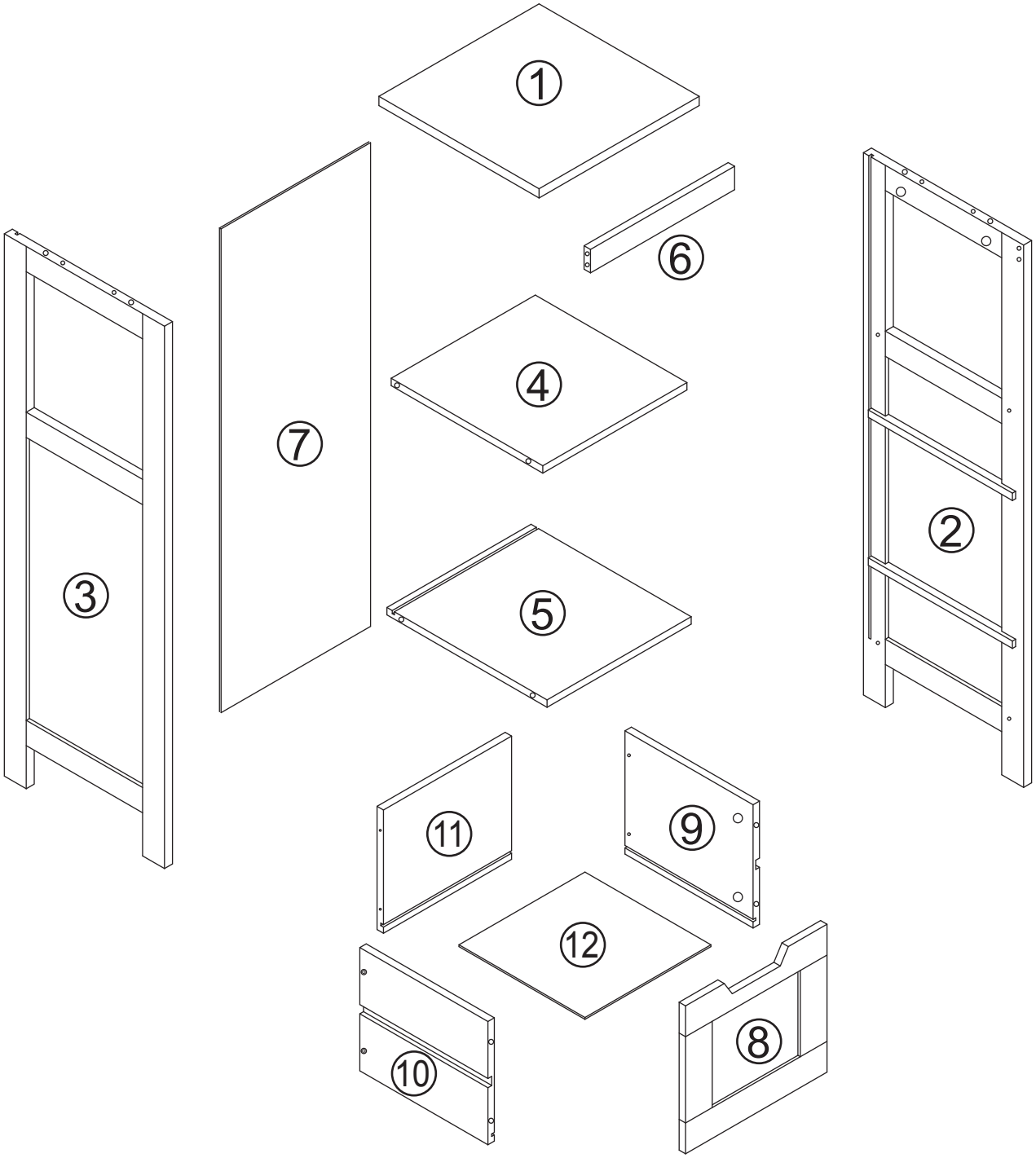

Ax20 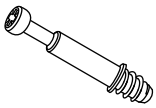 6x35mm	Bx20 15x10mm	Cx8 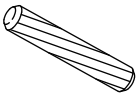 6x30mm	Dx8 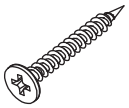 4x35mm
Ex4 3x14mm	Fx4	Gx4	

1	Ax20	Cx8
	6*35mm	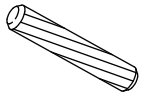 6*30mm

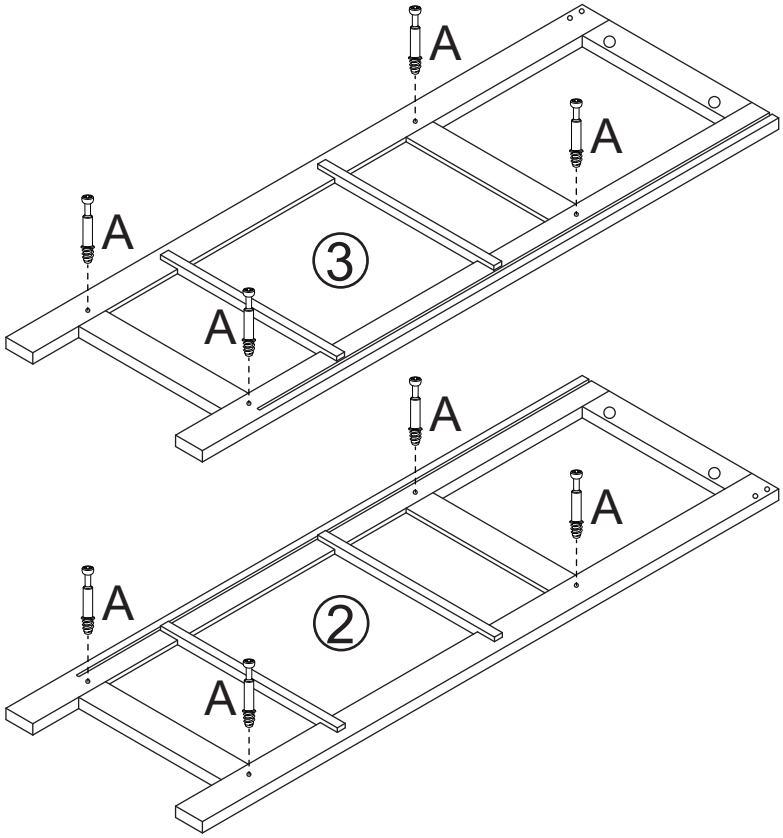

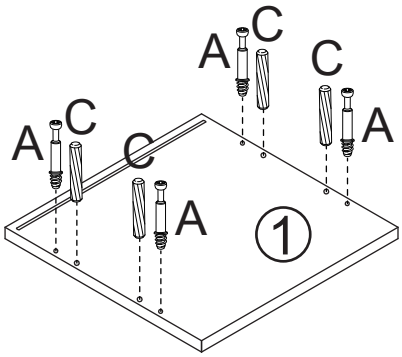

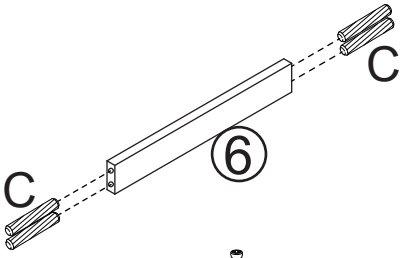

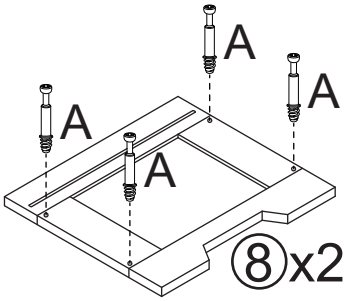

2	Bx8	Dx8
	15*10mm	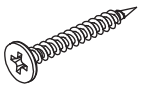 4*35mm

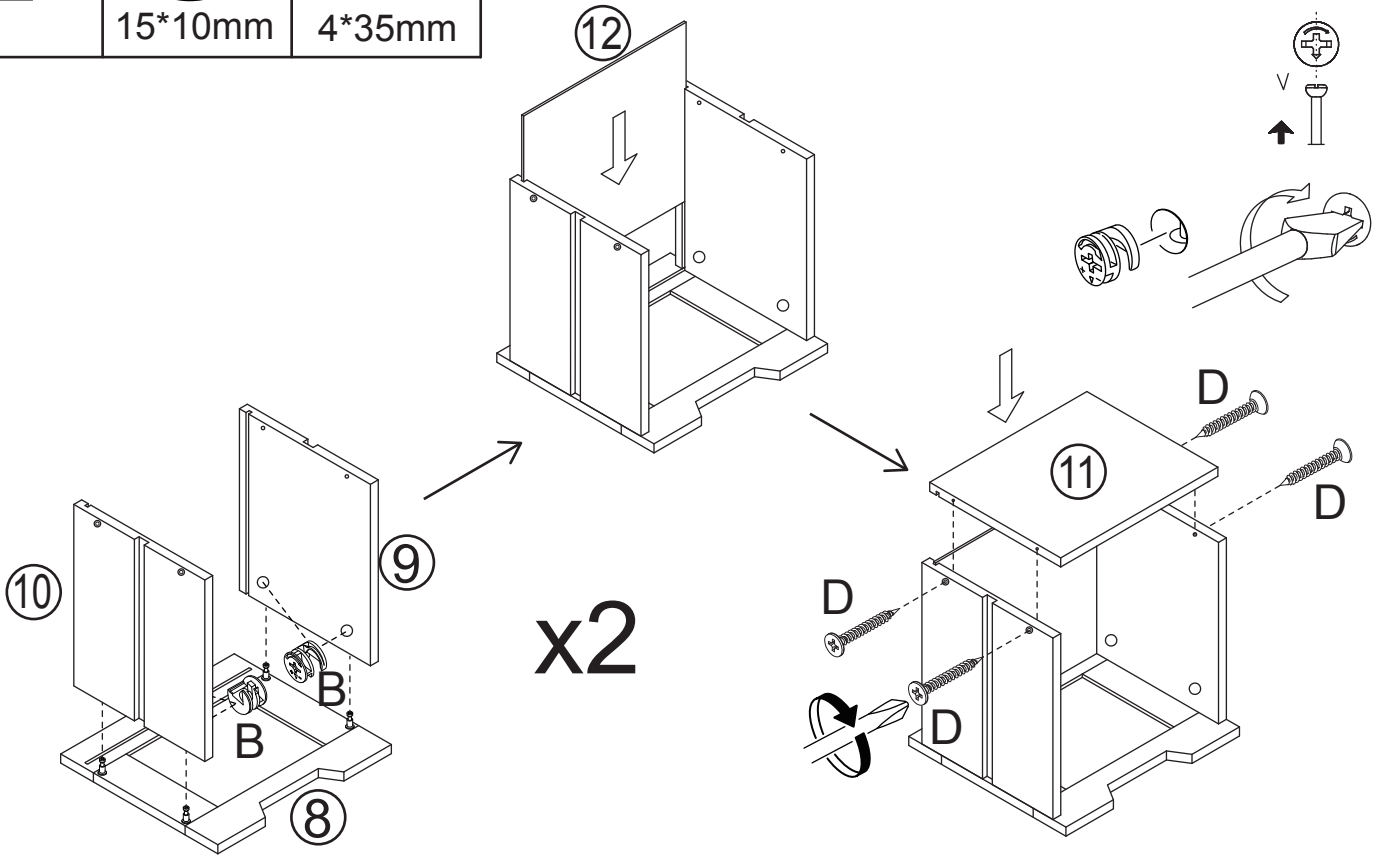

3	Bx4 15*10mm

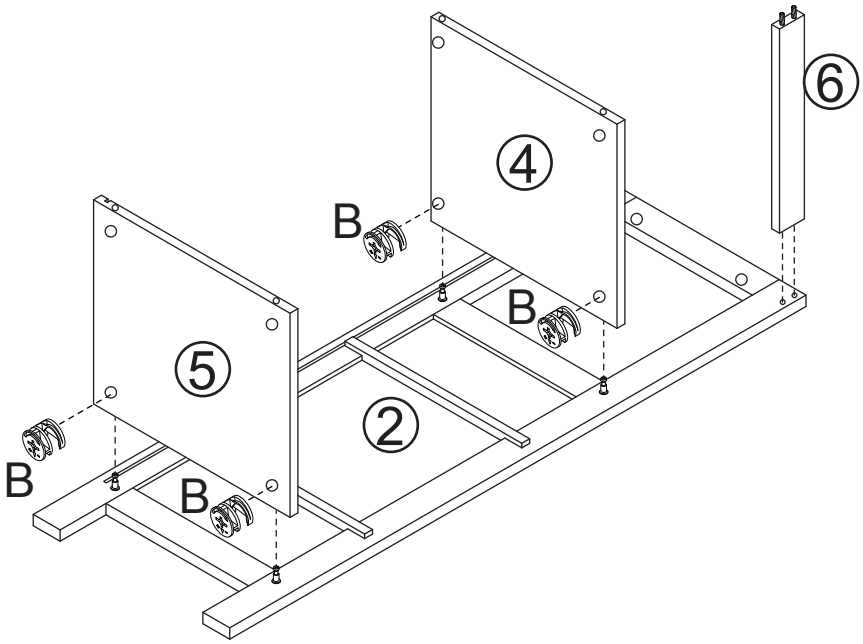

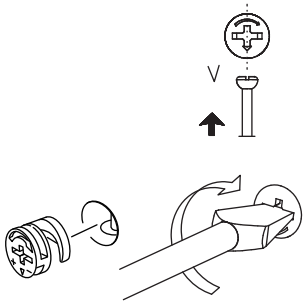

4	Bx4 15*10mm

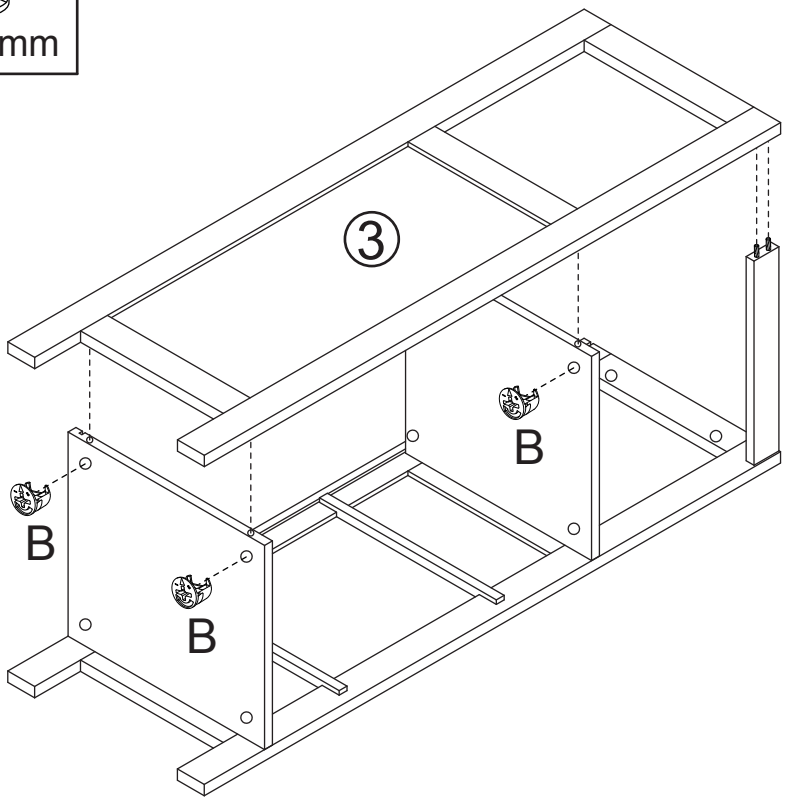

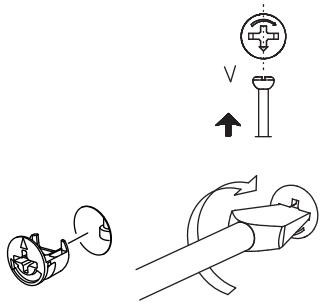

5

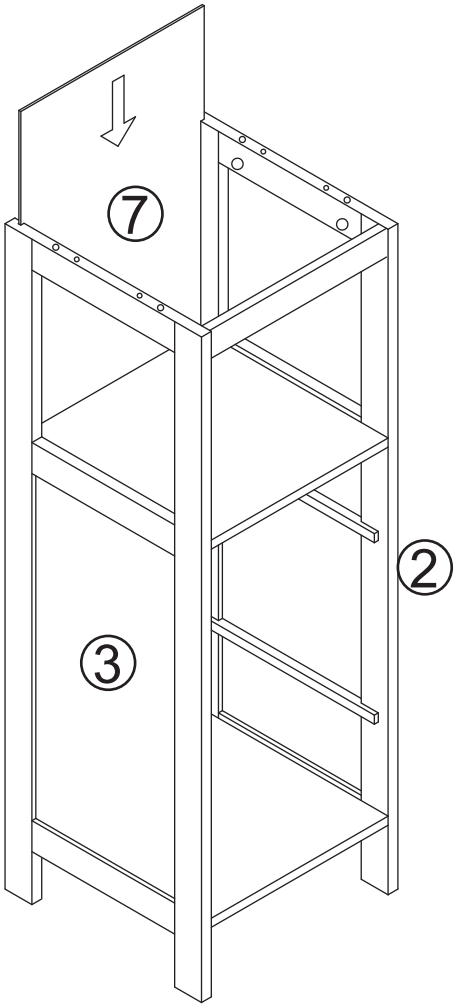

6

Bx4

15*10mm

Fx4

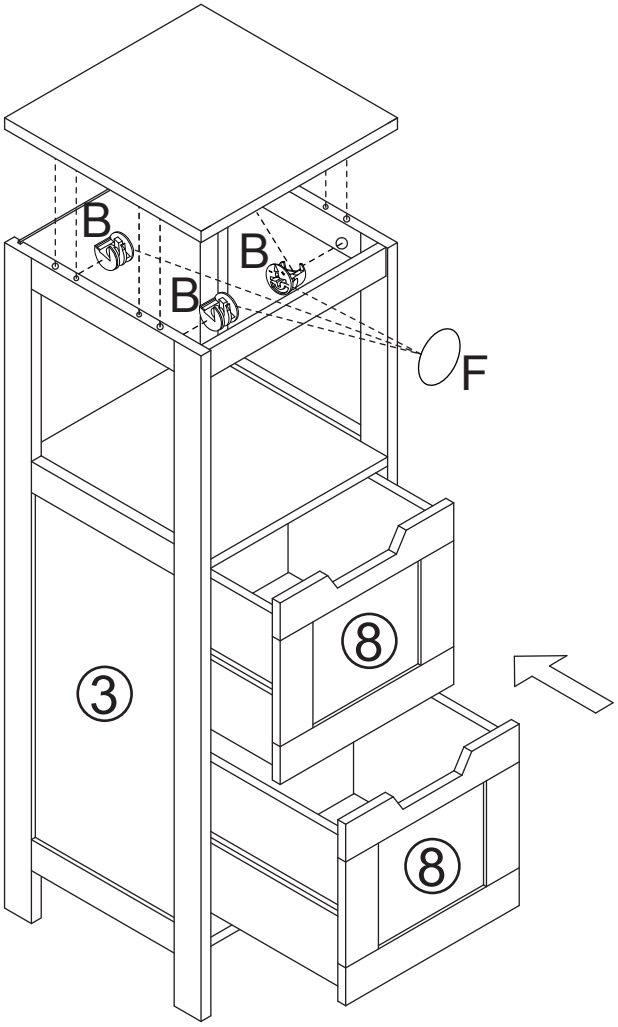

7	Ex4 3x14mm	Gx4

Before fix “G”,
please make sure size "XX=YY"

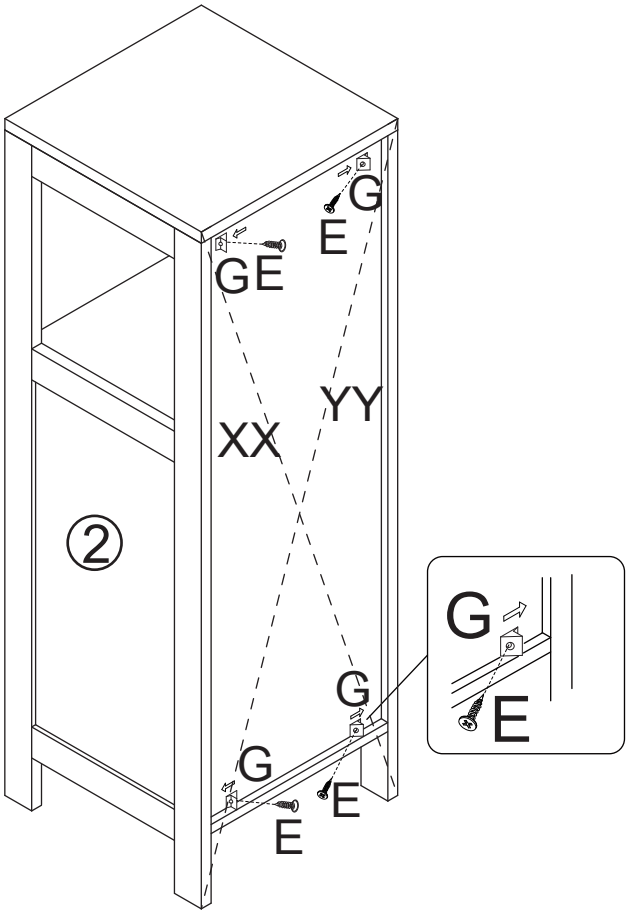
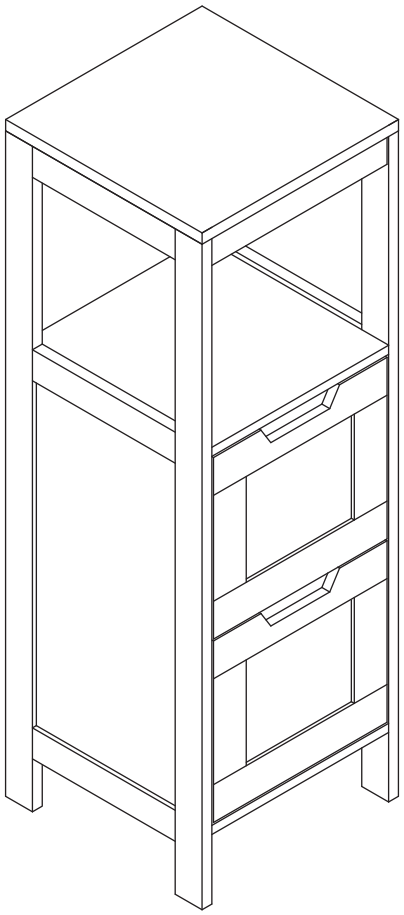
8