E

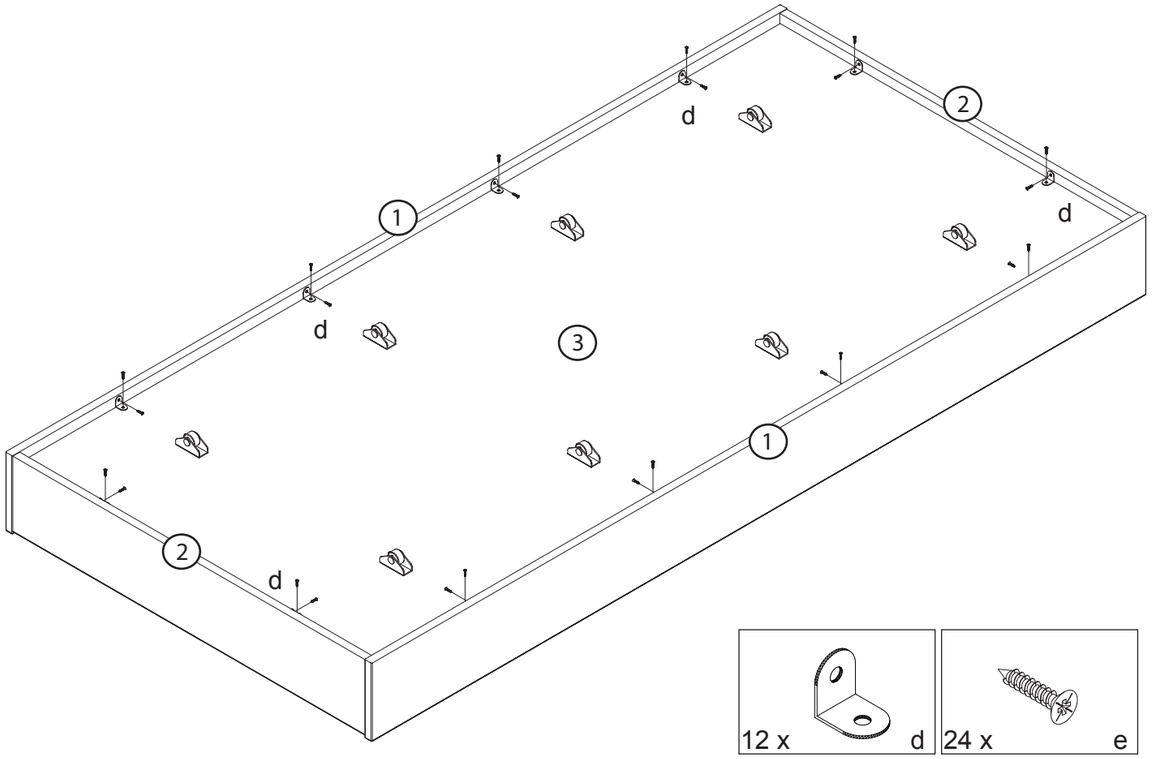

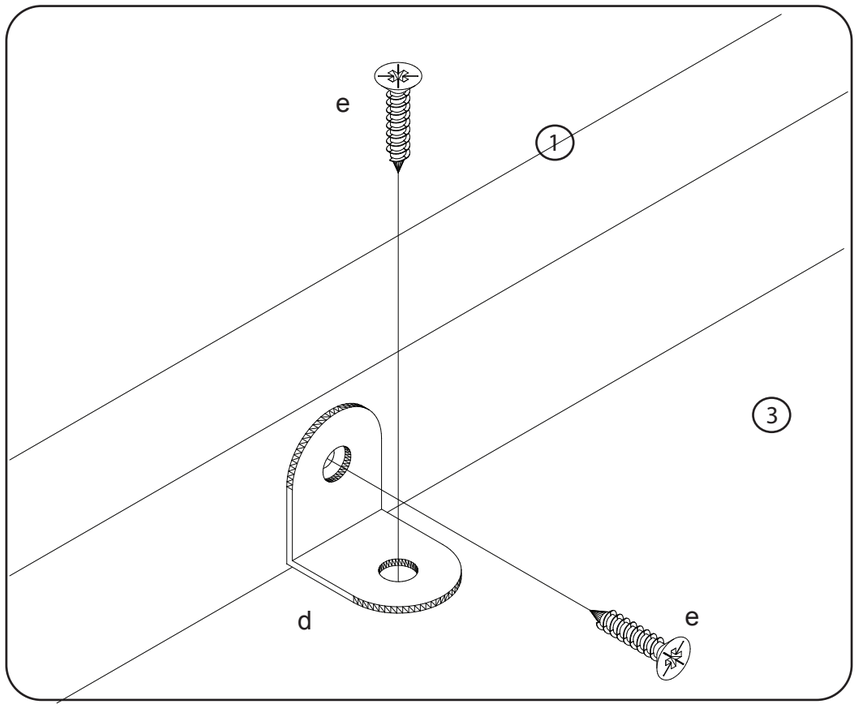

VIPACK

Lucas / Aline BEDDRAWER
LURB9080 / ALRB9070

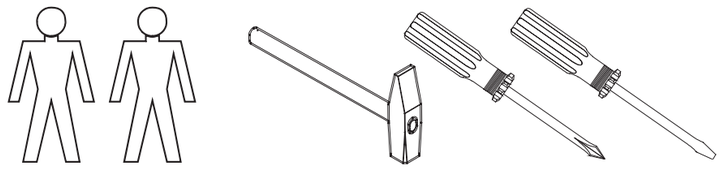

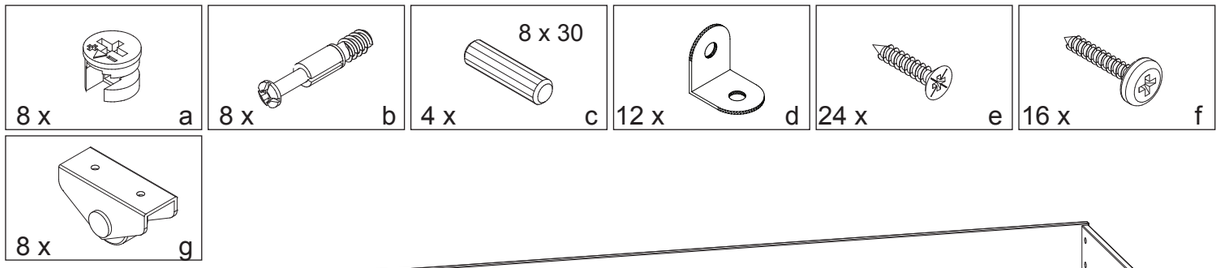

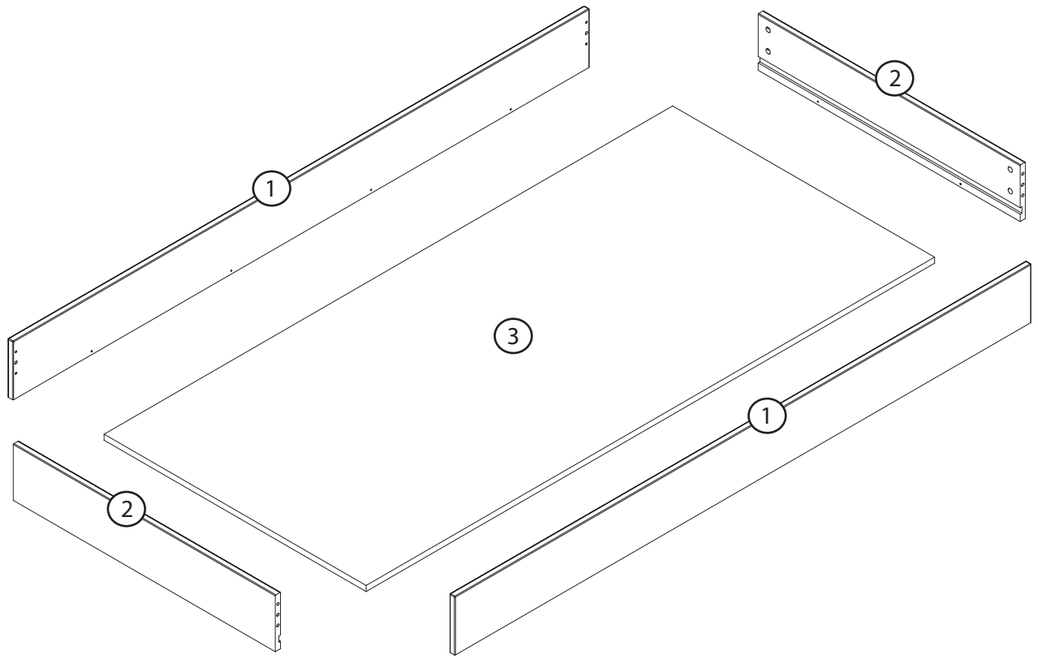

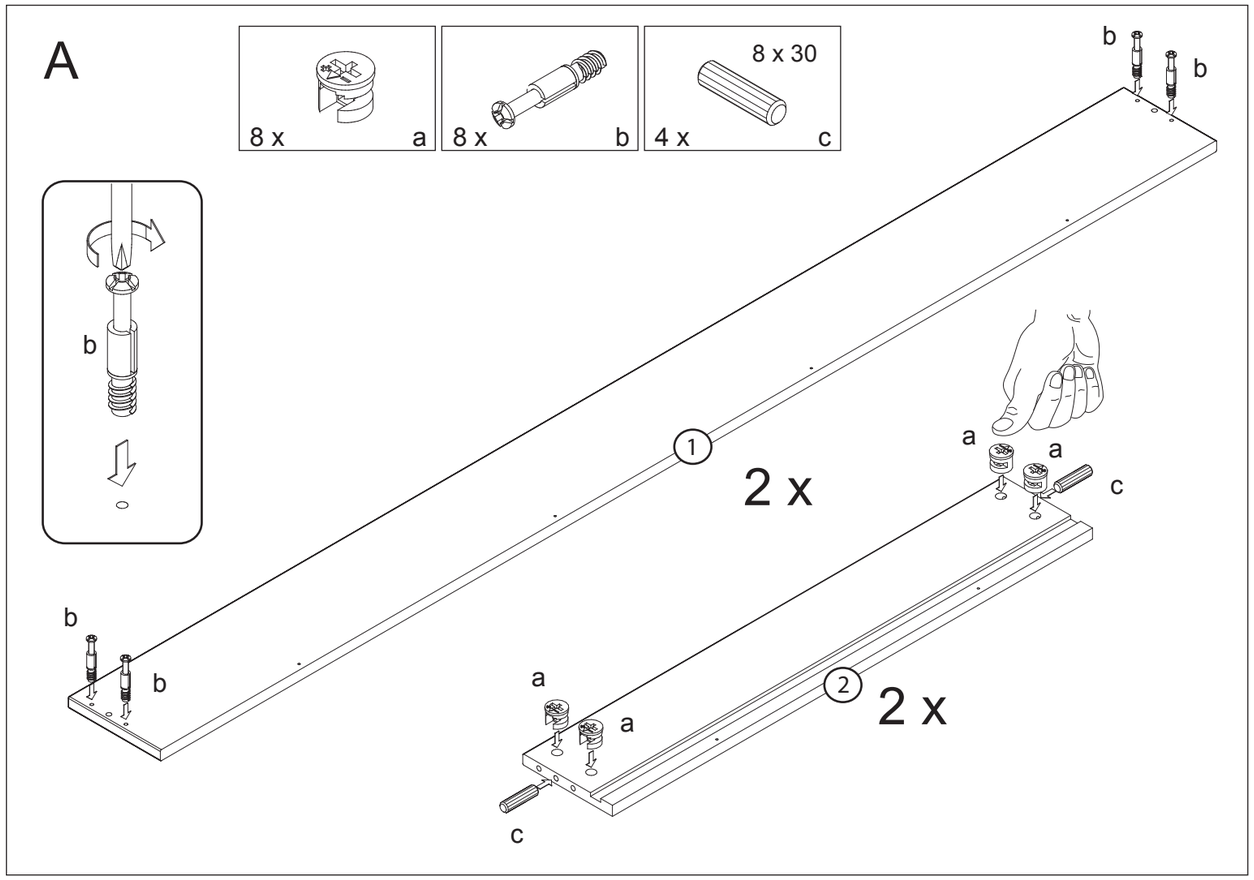
A
8 x
a
8 x
b
4 x
8 x 30
c
b
b
1
2 x
a
a
c
b
b
a
a
2
2 x
c

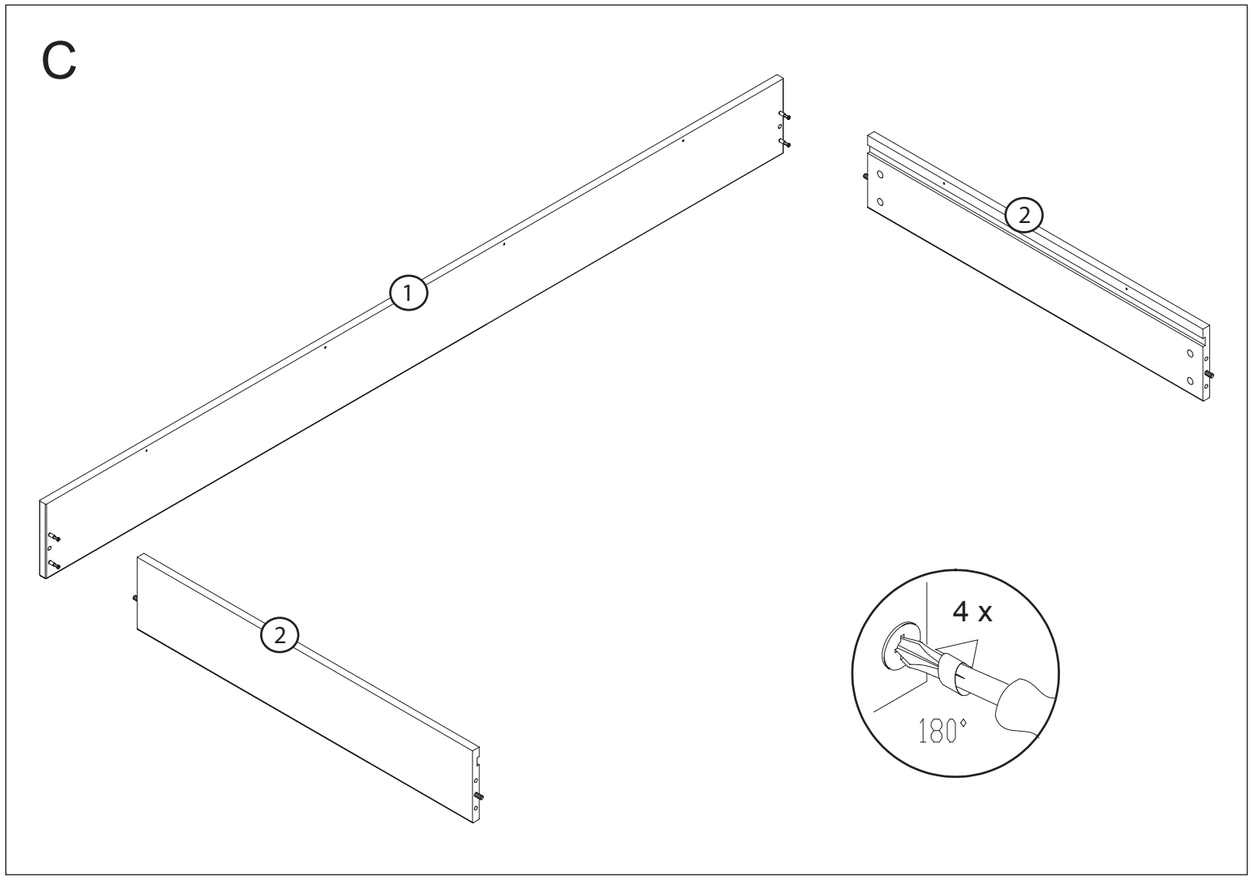
C
1
2
2
4 x
180°

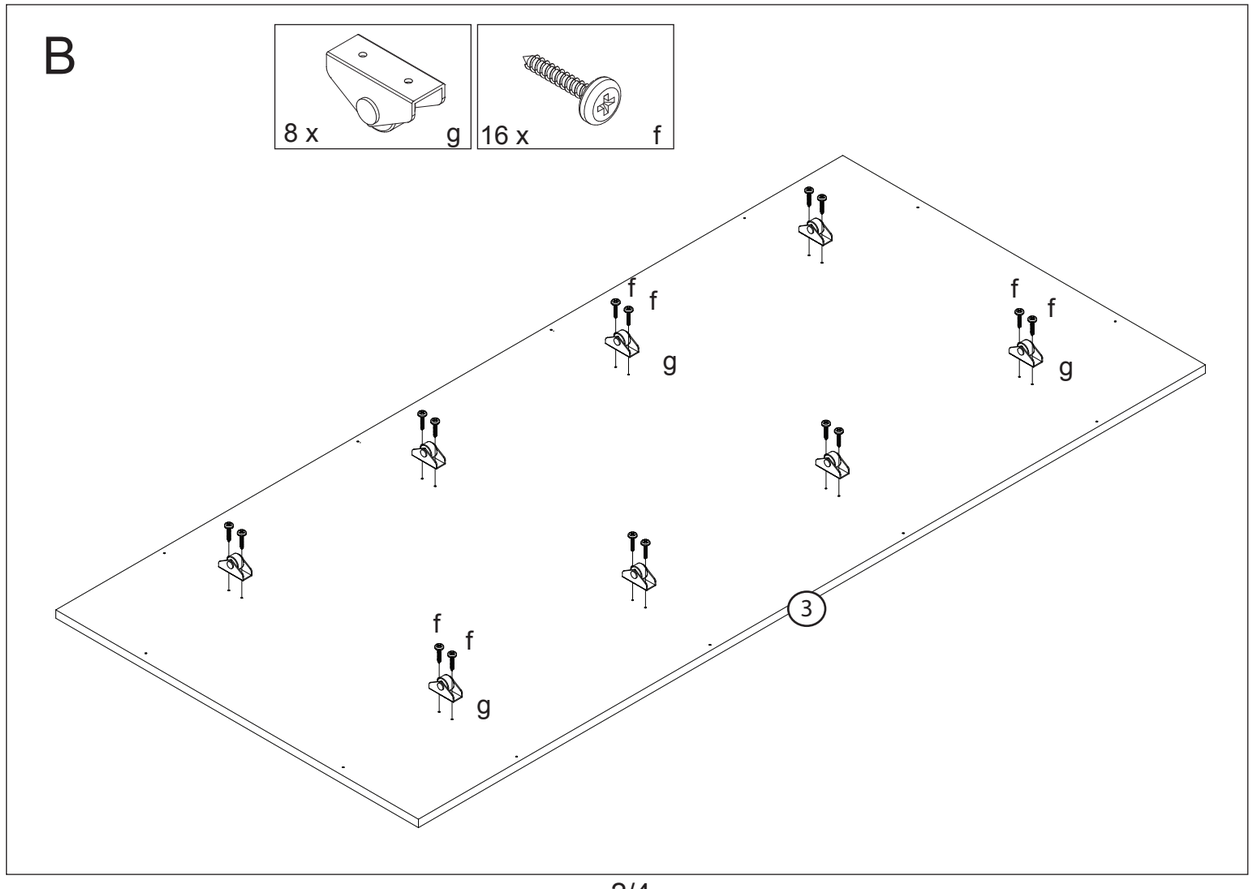
B
8 x
g
16 x
f
f
f
g
f
f
g
f
f
g
3

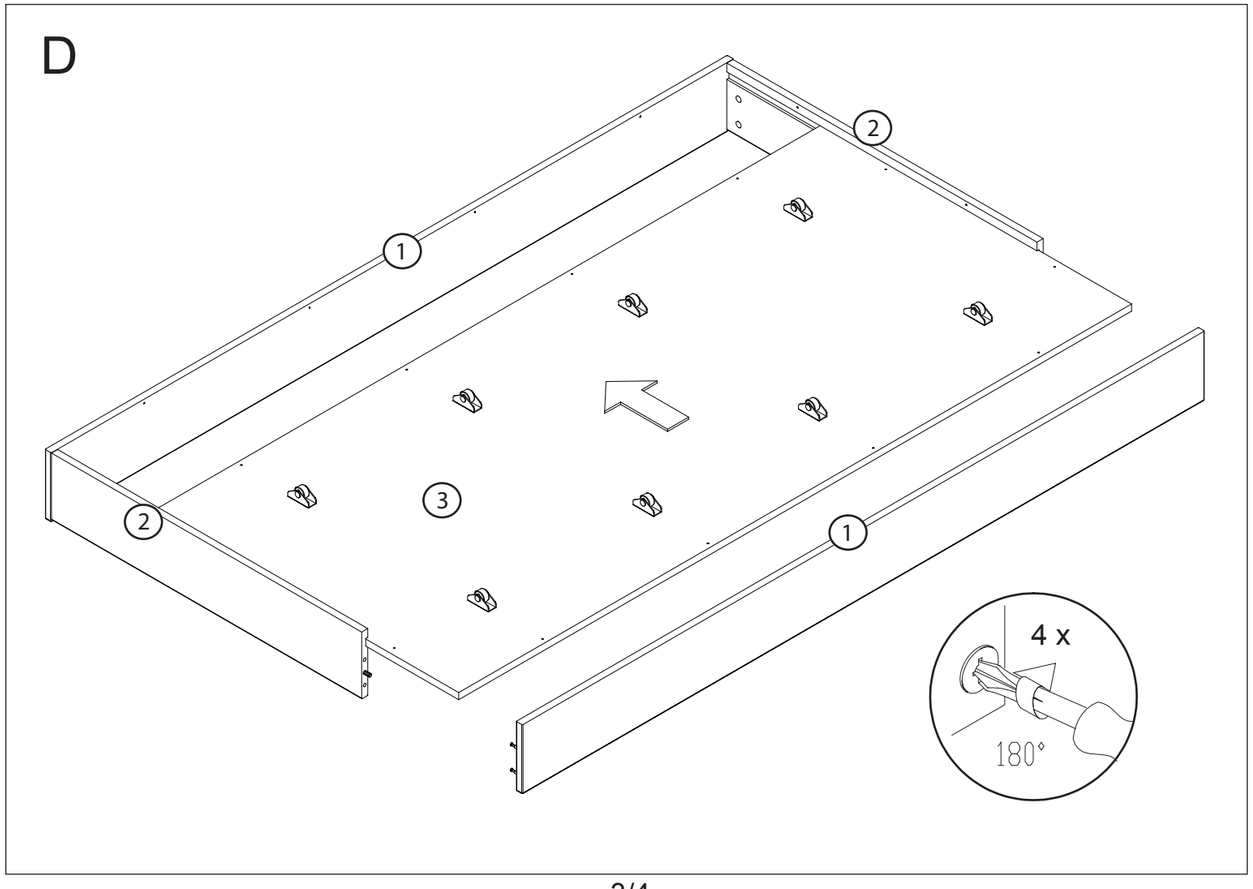
D
2
1
2
3
1
4 x
180°