ASSEMBLY INSTRUCTION FOR TABLE

1

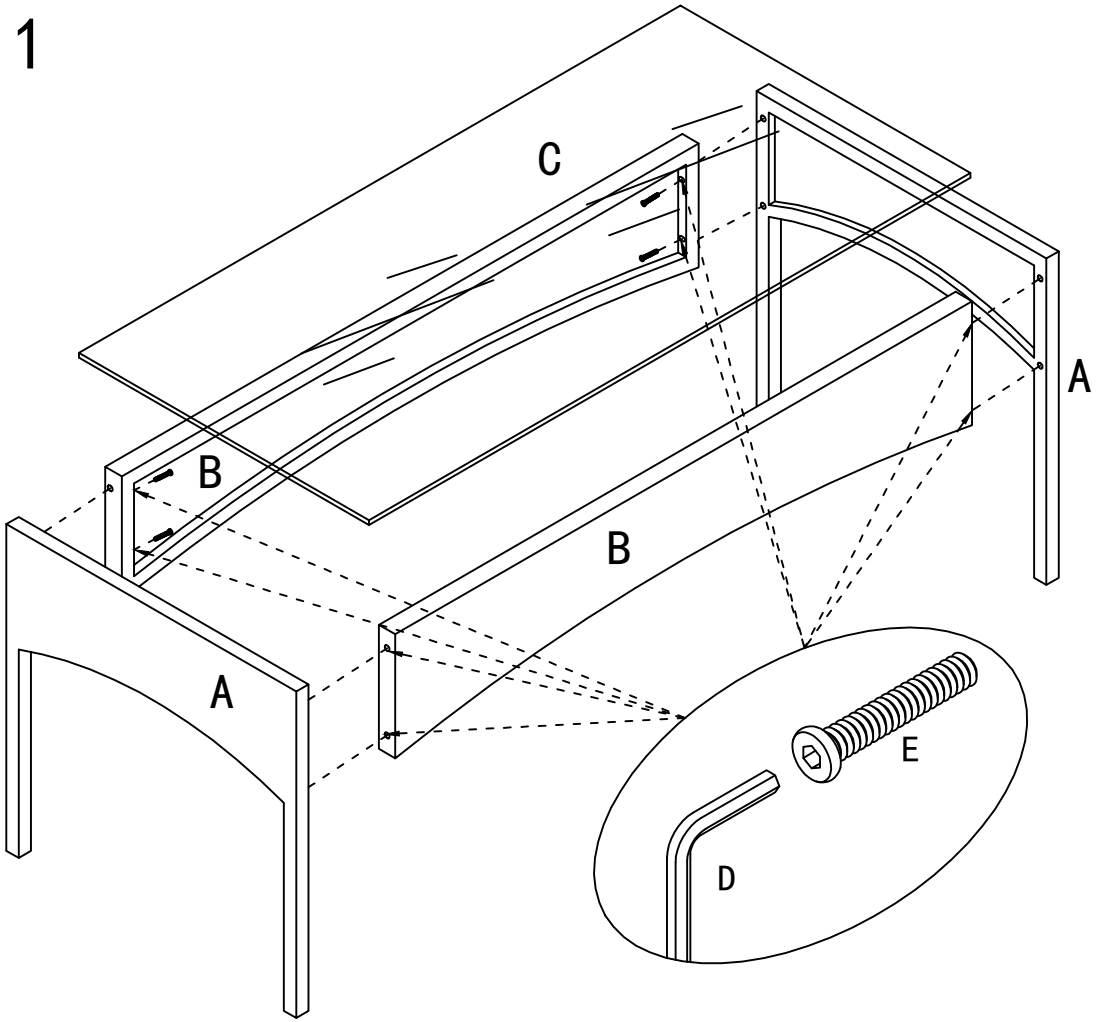

2

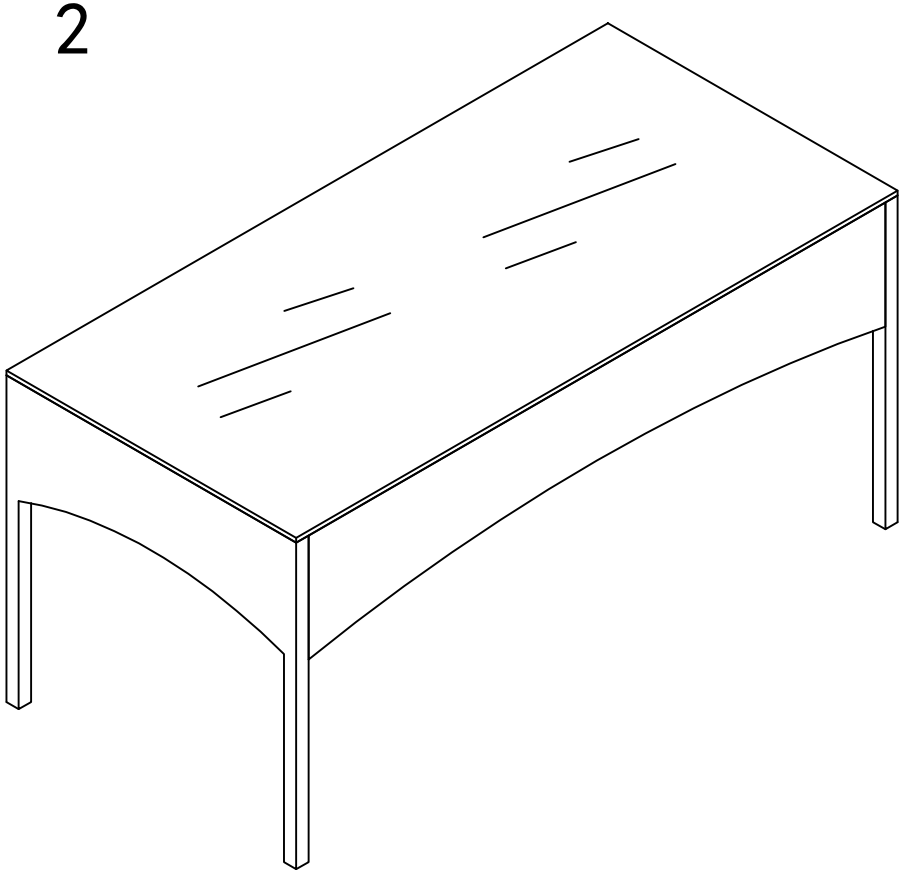

A

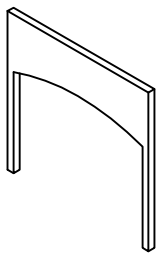

2 pcs

B

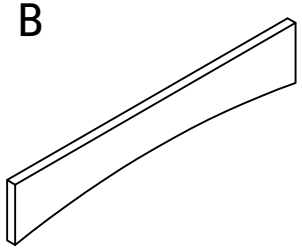

2 pcs

C

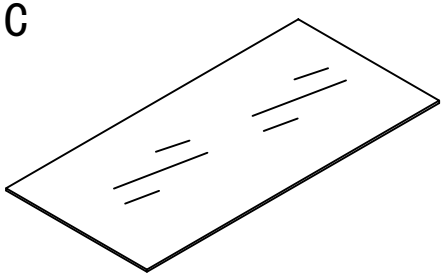

glass 1 pc

D

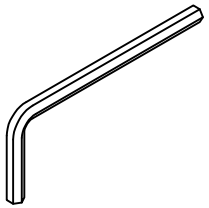

1 pc

E

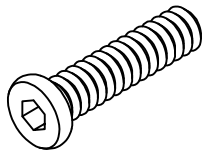

M6 screw
8 pcs