19470-19471

Ax1 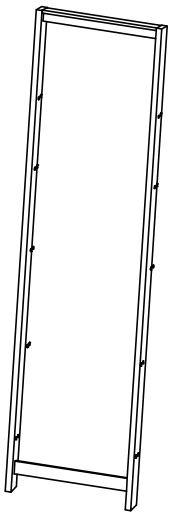	Bx1	Cx1	Dx1
	Ex1	Fx1	
Hx20 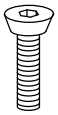	Ix1		

1

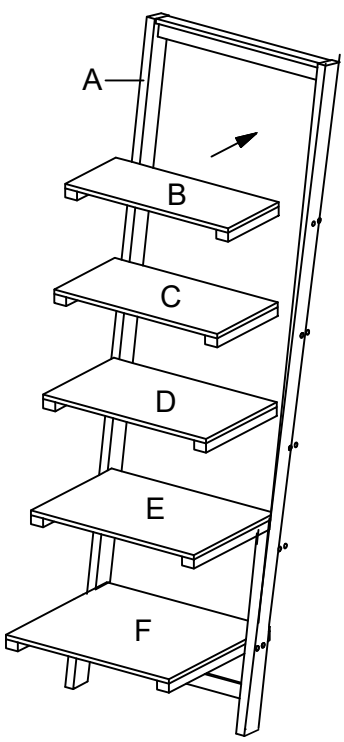

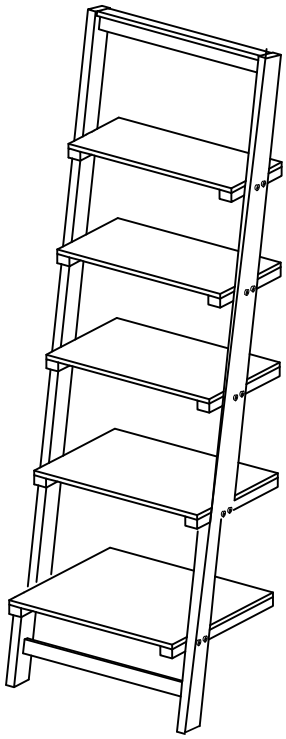
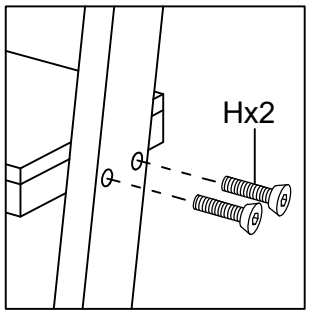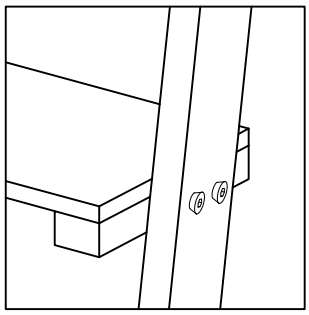
x10