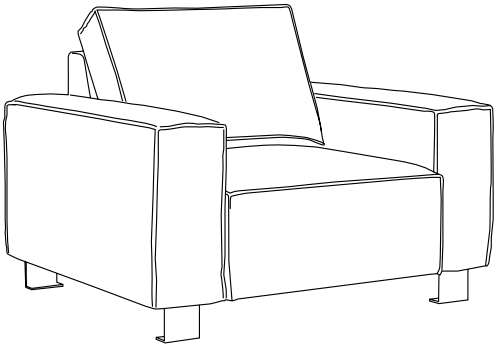

OPERA/DOLCE/MODERN
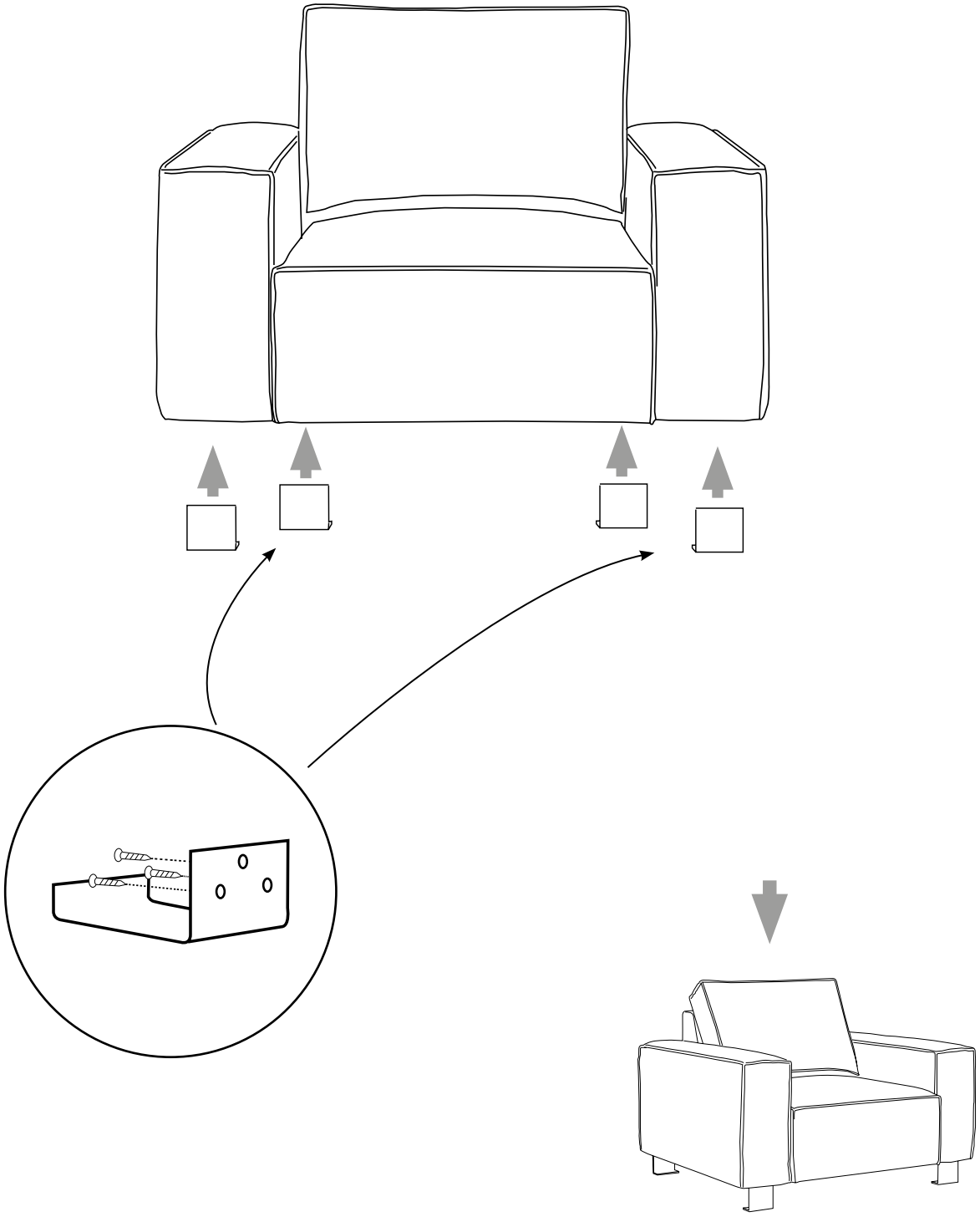
arm