HIBISCUS
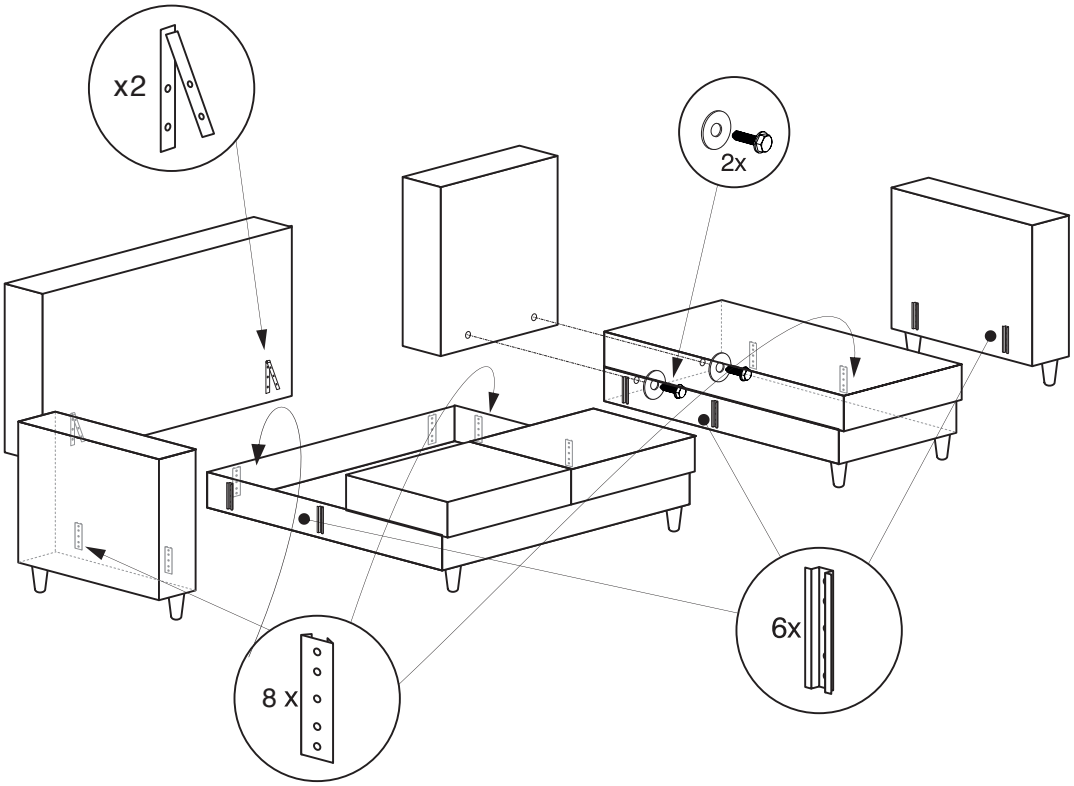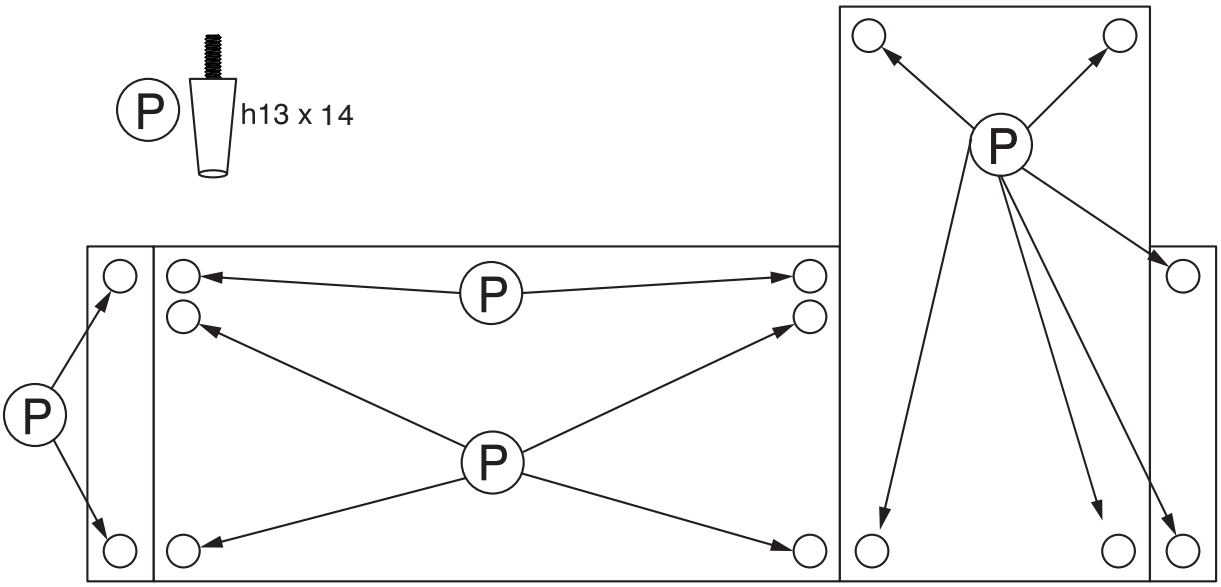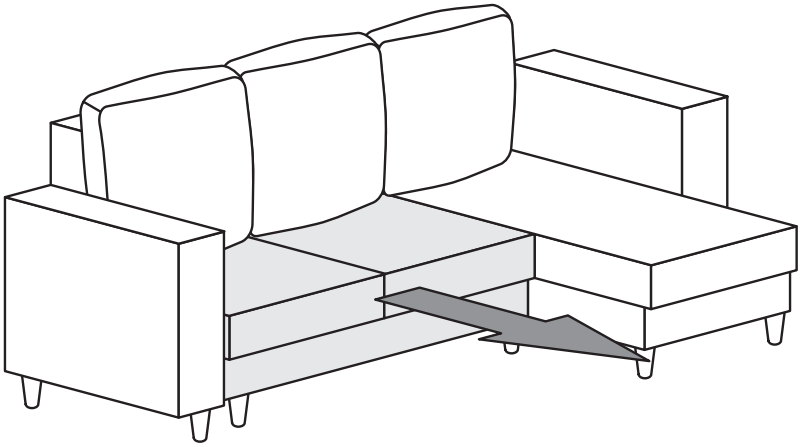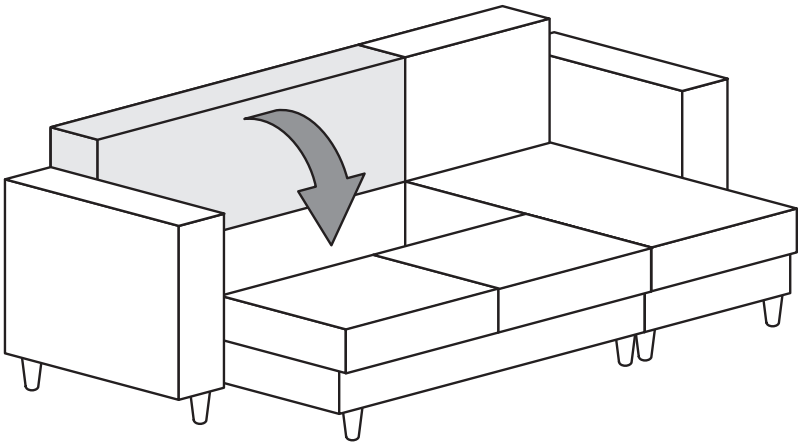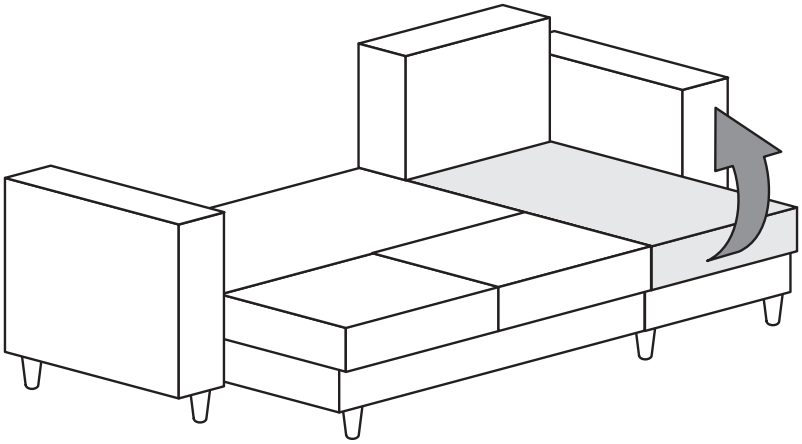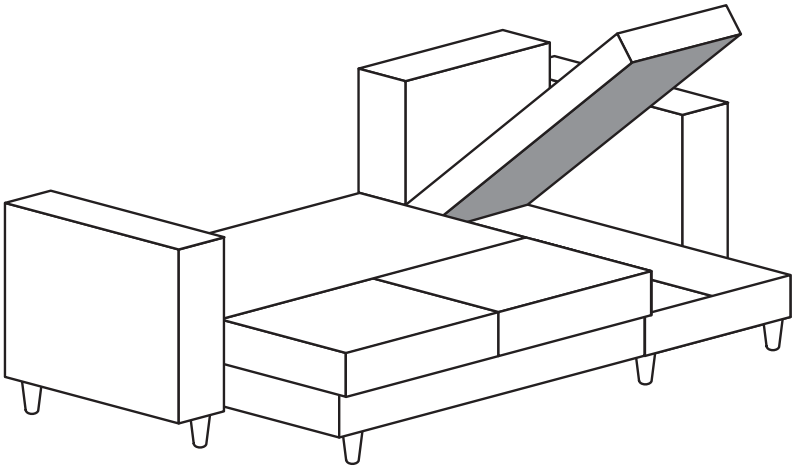
right/left corner sofa