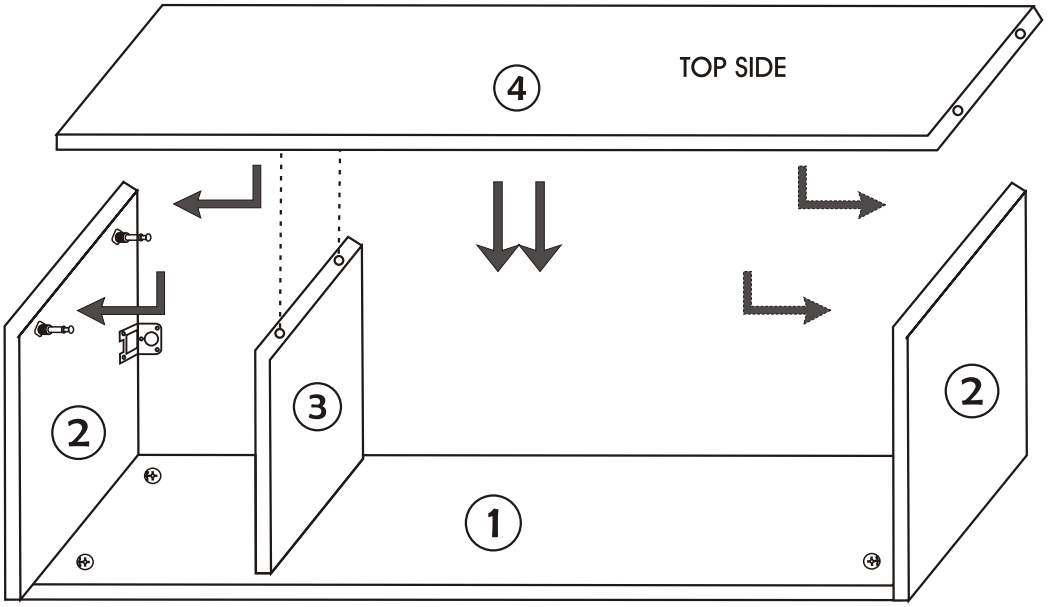
TOP SIDE
4
2
3
2
1

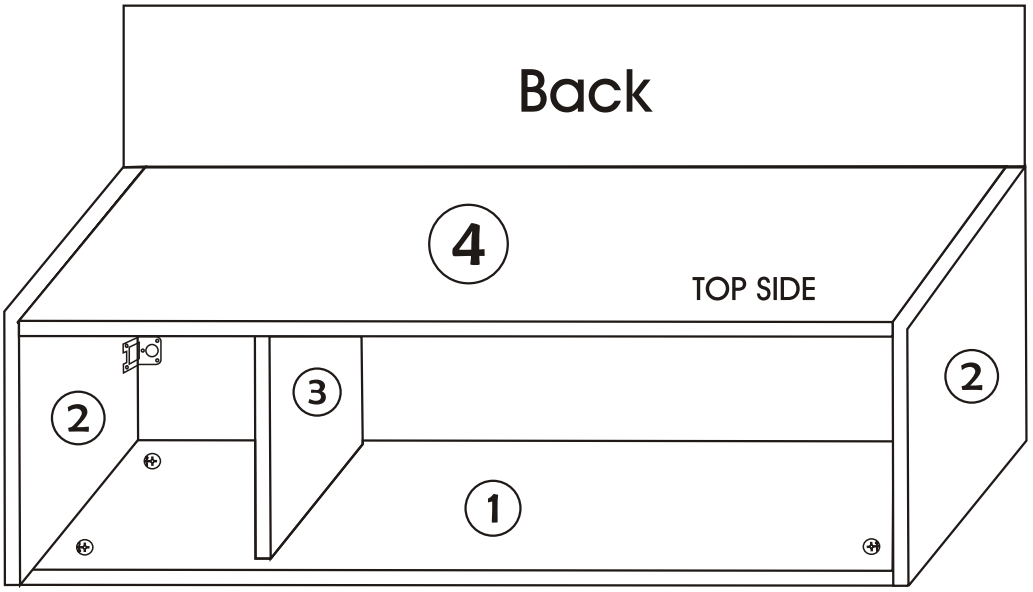
Back
4
TOP SIDE
2
3
2
1

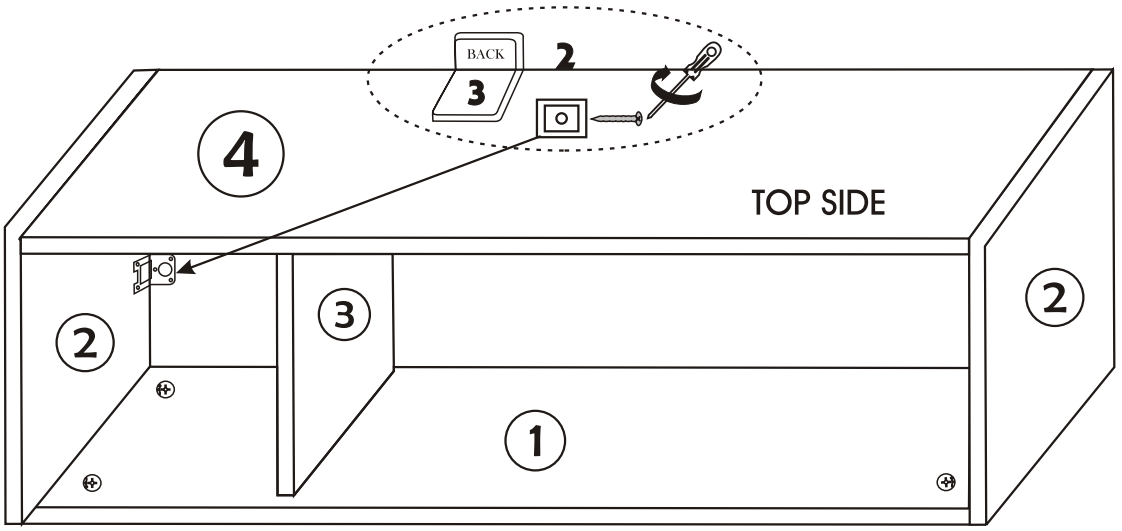
BACK
3
2
4
TOP SIDE
2
3
2
1

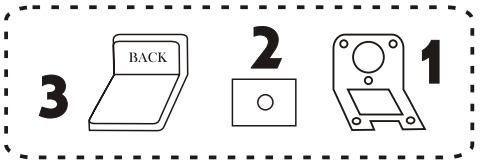
3
BACK
2
1

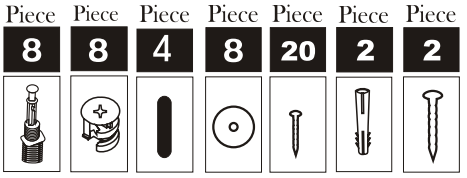
Piece 8
Piece 8
Piece 4
Piece 8
Piece 20
Piece 2
Piece 2