# ASSEMBLY INSTRUCTION
## BALI RECTANGULAR TABLE

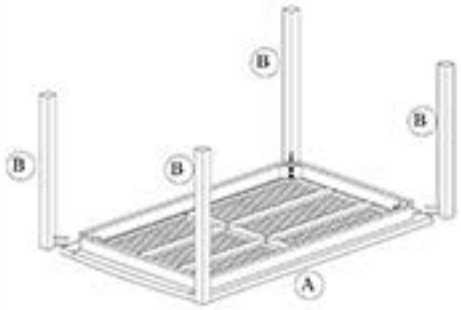


1

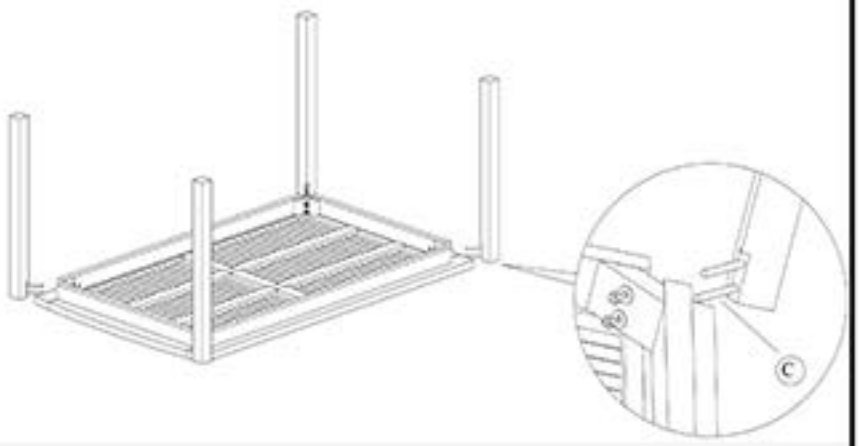


2

PART LIST

| PART | QTY | DESCRIPTION |
|---|---|---|
| A | 1 | TOP |
| B | 4 | LEGS |
| | | |
| | | |
| | | |

HARDWARE LIST

| PART | QTY | SIZE | PICTURE |
|---|---|---|---|
| C | 8 | 8 mm x 8 cm | |
| | | | |