The Assembly Instructions

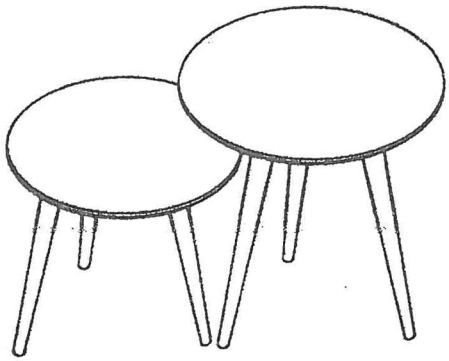

pako Furniture
www.pakoworld.com
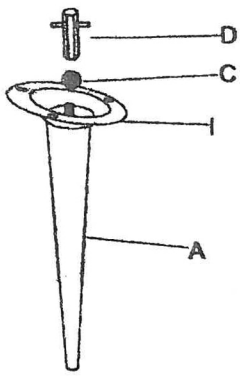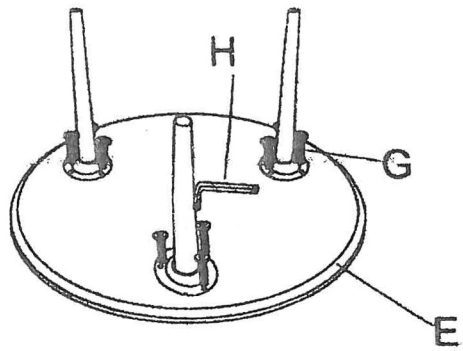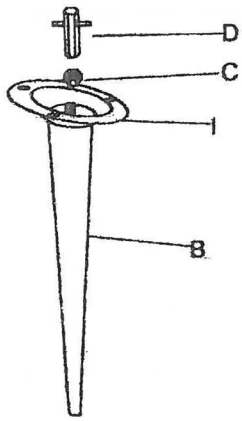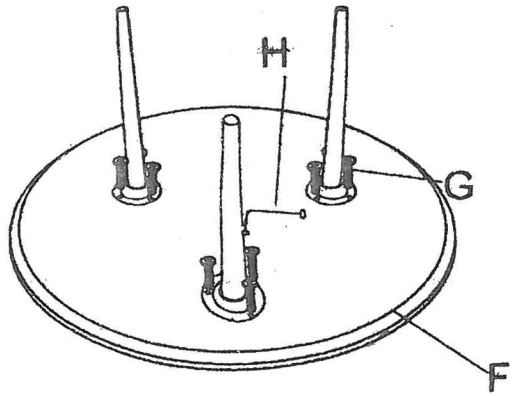
A		3	B		3	C		6	D		1
E		1	F		1	G		18	H		1
									I		6