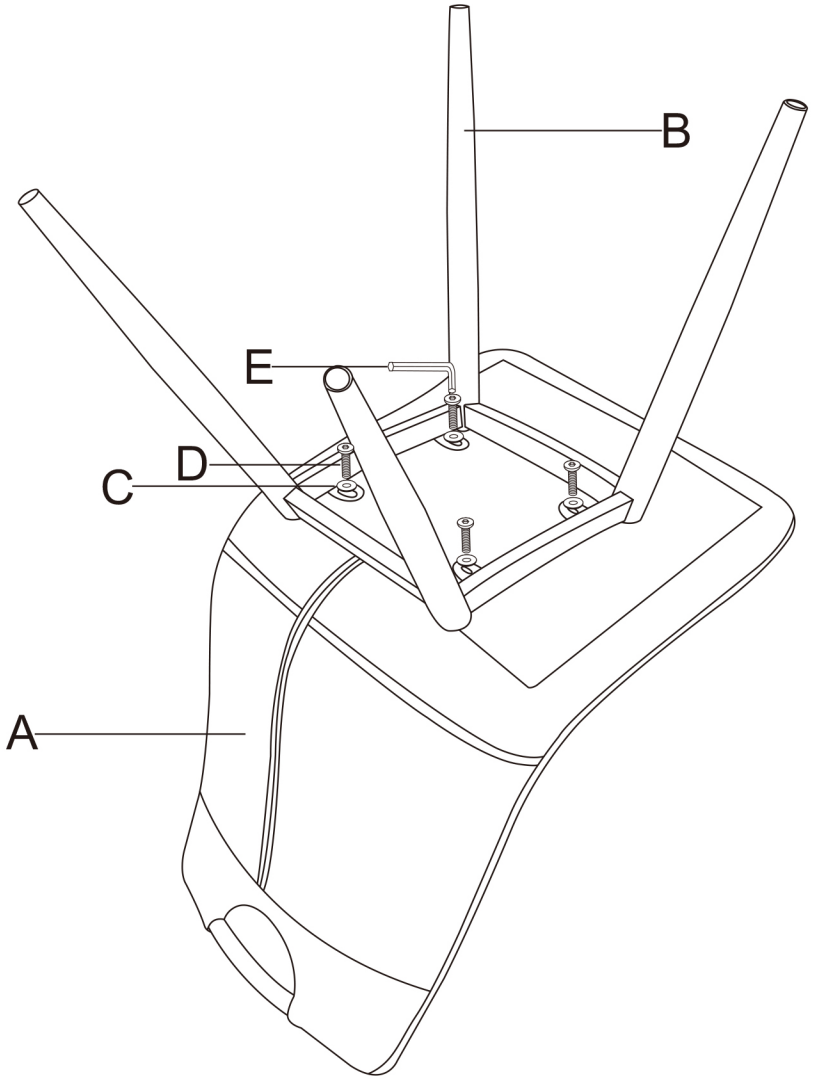

pako Furniture
www.pakoworld.com

A		1	B	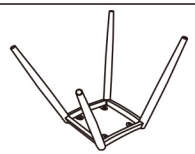	1	C		4
D	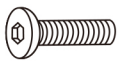	4	E		1			