The Assembly Instructions

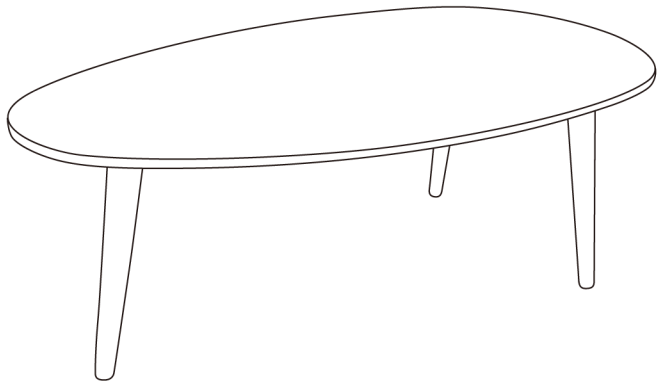
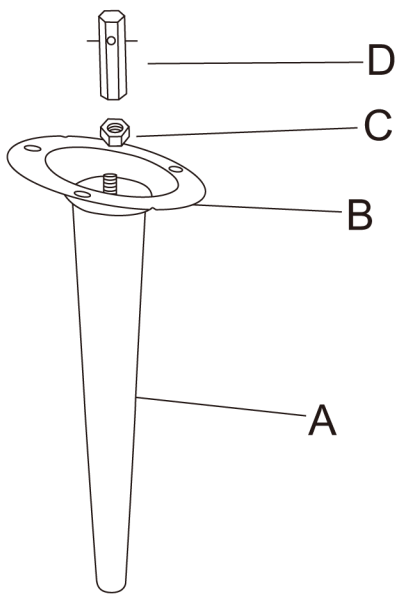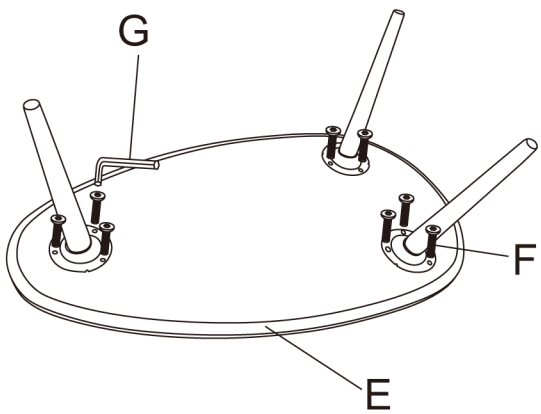
A		3	B		3	C		3	D		1
E		1	F		9	G		1